OVERALL EXTERIOR ELEVATION - NORTH
2 1/16" = 1'-0"

OVERALL EXTERIOR ELEVATION - SOUTH
1 1/16" = 1'-0"

8/10/2020 8:33:20 AM

WORKSHOP
WORKSHOP ARCHITECTS, INC

ARCHITECT

WORKSHOP ARCHITECTS
201 E PITTSHBURGH AVENUE, SUITE 301
MILWAUKEE, WI 53204
414.272.8822
WWW.WORKSHOPARCHITECTS.COM

ST. OLAF COLLEGE

PROJECT:
OLE AVENUE PROJECT TOWNHOMES

ADDRESS:
1520 ST OLAF AVENUE NORTHFIELD, MN 55057

ISSUANCE HISTORY - THIS SHEET

△NO.	DESCRIPTION	DATE

WSA PROJECT #: 19-270

DATE: October 12, 2020

ISSUED FOR ZONING- SITE PLAN REVIEW

EXTERIOR ELEVATIONS

FOR REFERENCE ONLY

A200

© COPYRIGHT WORKSHOP ARCHITECTS, INC.

*BASIS OF DESIGN: ANDERSEN E SERIES

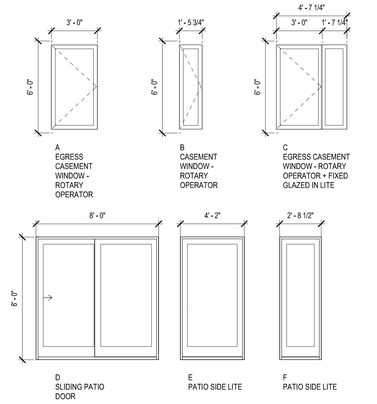

WINDOW LEGEND
1/4" = 1'-0"

GENERAL NOTES - EXTERIOR ELEVATION

A. **ELEVATIONS OF EXISTING FLOORS ARE BASED ON SURVEY INFORMATION AND/OR AS-BUILT DRAWINGS PROVIDED BY THE OWNER. THE SURVEY DATA MAY NOT BE COMPLETE AND THE ACTUAL EXISTING ELEVATIONS MAY VARY IN DIFFERENT PORTIONS OF THE EXISTING BUILDING. ALL INFORMATION MUST BE FIELD VERIFIED AND COORDINATED BETWEEN NEW AND EXISTING CONSTRUCTION TO PROVIDE MATCHING FLOOR ELEVATIONS WHERE REQUIRED.**

KEYNOTES - EXTERIOR ELEVATION

#	DESCRIPTION
1	6" VERTICAL SIDING - BASIS OF DESIGN: BORAL TRUEXTERIOR - PREFINISHED
2	4" MANUFACTURED CALCIUM SILICATE FULL BED STONE - BASIS OF DESIGN ARRISCRAFT LAURIER - REFER TO WALL SECTION 5/A310
3	4" MANUFACTURED CALCIUM SILICATE FULL BED STONE - BASIS OF DESIGN ARRISCRAFT ARCHITECTURAL LINEAR SERIES BRICK - REFER TO WALL SECTION 5/A310
4	CANOPY - TUBE STEEL FRAME INTERNALLY DRAINED TO ADJACENT ROOF LEADER - UNDERSIDE FINISH TO MATCH VERTICAL SIDING WITH LIGHTING
5	ALUMINUM GUTTER BOX AND ROUND GALVANIZED RAIN LEADER
6	6" SEAMLESS ALUMINUM HALF ROUND GUTTER WITH CRADLE HANGERS
7	MALARKY ASPHALT SHINGLE
8	PAINTED ALUMINUM FLUSH ENTRY DOOR WITH ALUMINUM FRAME AND SIDE LITE TO MATCH PATIO DOOR
9	SOFFIT TO MATCH VERTICAL SIDING WITH LIGHTING
10	METAL CORNICE - ALTERNATE GFCR CAP TO MATCH STONE
11	WOOD DECKING - FSC CERTIFIED HARDWOOD - BASIS OF DESIGN KEBONY

PERCENT GLAZED FOR WHOLE BUILDING : 12.9%

WORKSHOP
WORKSHOP ARCHITECTS, INC

ARCHITECT

WORKSHOP ARCHITECTS
201 E PITTSHBURGH AVENUE, SUITE 301
MILWAUKEE, WI 53204
414.272.8822
WWW.WORKSHOPARCHITECTS.COM

ST. OLAF COLLEGE

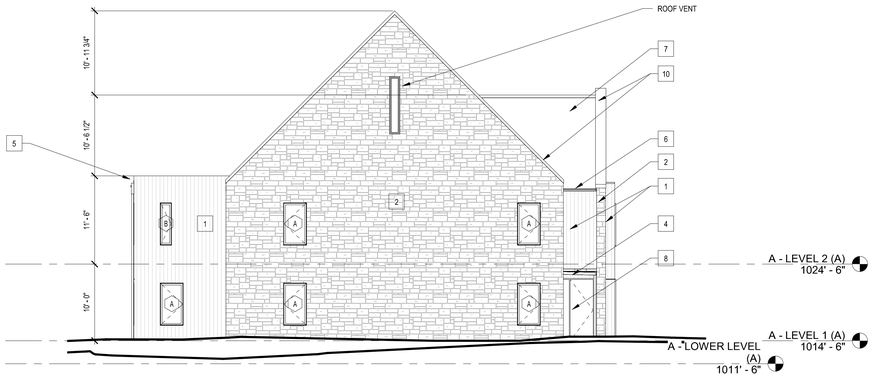

PERCENT GLAZED: 5.1%

4 ELEVATION - 2 PLEX WEST
1/8" = 1'-0"

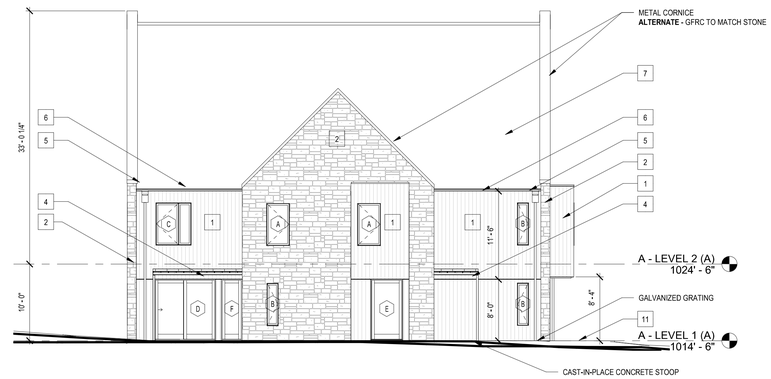

PERCENT GLAZED: 15.9%

3 ELEVATION - 2 PLEX SOUTH
1/8" = 1'-0"

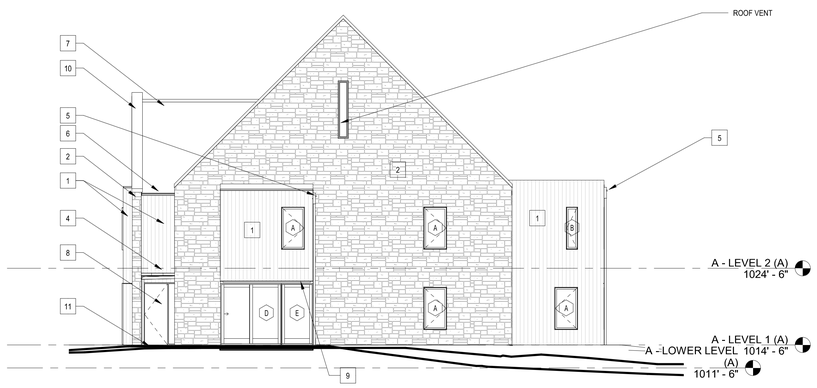

PERCENT GLAZED: 9.5%

1 ELEVATION - 2 PLEX EAST
1/8" = 1'-0"

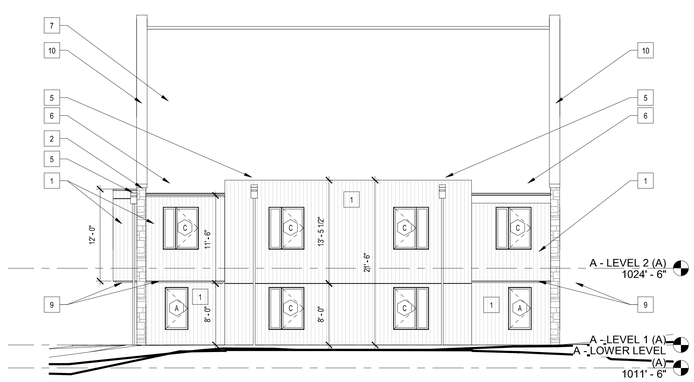

PERCENT GLAZED: 15.9%

2 ELEVATION - 2 PLEX NORTH
1/8" = 1'-0"

8/10/2020 8:33:23 AM

PROJECT:
OLE AVENUE PROJECT TOWNHOMES

ADDRESS:
1520 ST OLAF AVENUE
NORTHFIELD, MN 55057

ISSUANCE HISTORY - THIS SHEET

△NO.	DESCRIPTION	DATE

WSA PROJECT #: 19-270

DATE: October 12, 2020

ISSUED FOR ZONING- SITE PLAN REVIEW

EXTERIOR ELEVATIONS - 2 PLEX

FOR REFERENCE ONLY

A201

© COPYRIGHT WORKSHOP ARCHITECTS, INC.

*BASIS OF DESIGN: ANDERSEN E SERIES

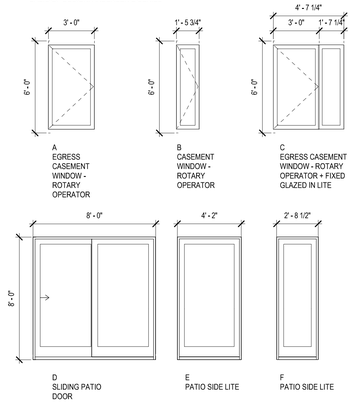

WINDOW LEGEND
1/4" = 1'-0"

GENERAL NOTES - EXTERIOR ELEVATION

A. ELEVATIONS OF EXISTING FLOORS ARE BASED ON SURVEY INFORMATION AND/OR AS-BUILT DRAWINGS PROVIDED BY THE OWNER. THE SURVEY DATA MAY NOT BE COMPLETE AND THE ACTUAL EXISTING ELEVATIONS MAY VARY IN DIFFERENT PORTIONS OF THE EXISTING BUILDING. ALL INFORMATION MUST BE FIELD VERIFIED AND COORDINATED BETWEEN NEW AND EXISTING CONSTRUCTION TO PROVIDE MATCHING FLOOR ELEVATIONS WHERE REQUIRED.

KEYNOTES - EXTERIOR ELEVATION

#	DESCRIPTION
1	6" VERTICAL SIDING - BASIS OF DESIGN: BORAL TRUEXTERIOR - PREFINISHED
2	4" MANUFACTURED CALCIUM SILICATE FULL BED STONE - BASIS OF DESIGN ARRISCRAFT LAURIER - REFER TO WALL SECTION 5/A310
3	4" MANUFACTURED CALCIUM SILICATE FULL BED STONE - BASIS OF DESIGN ARRISCRAFT ARCHITECTURAL LINEAR SERIES BRICK - REFER TO WALL SECTION 5/A310
4	CANOPY - TUBE STEEL FRAME INTERNALLY DRAINED TO ADJACENT ROOF LEADER - UNDERSIDE FINISH TO MATCH VERTICAL SIDING WITH LIGHTING
5	ALUMINUM GUTTER BOX AND ROUND GALVANIZED RAIN LEADER
6	6" SEAMLESS ALUMINUM HALF ROUND GUTTER WITH CRADLE HANGERS
7	MALARKY ASPHALT SHINGLE
8	PAINTED ALUMINUM FLUSH ENTRY DOOR WITH ALUMINUM FRAME AND SIDE LITE TO MATCH PATIO DOOR
9	SOFFIT TO MATCH VERTICAL SIDING WITH LIGHTING
10	METAL CORNICE - ALTERNATE GFCR CAP TO MATCH STONE
11	WOOD DECKING - FSC CERTIFIED HARDWOOD - BASIS OF DESIGN KEBONY

PERCENT GLAZED FOR WHOLE BUILDING : 12.9%

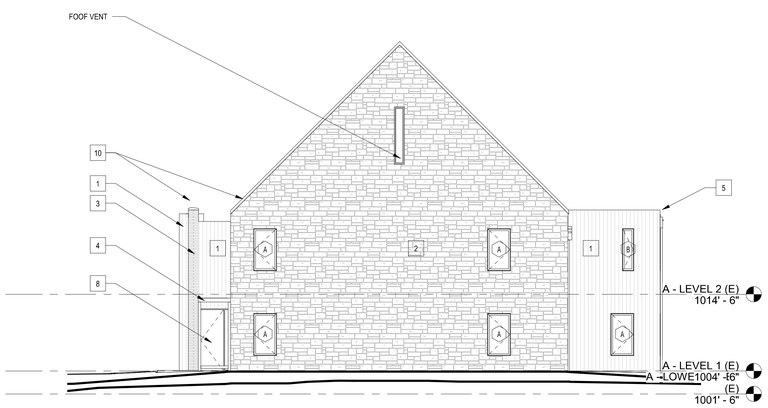

PERCENT GLAZED: 5.0%
4 ELEVATION - 4 PLEX EAST
1/8" = 1'-0"

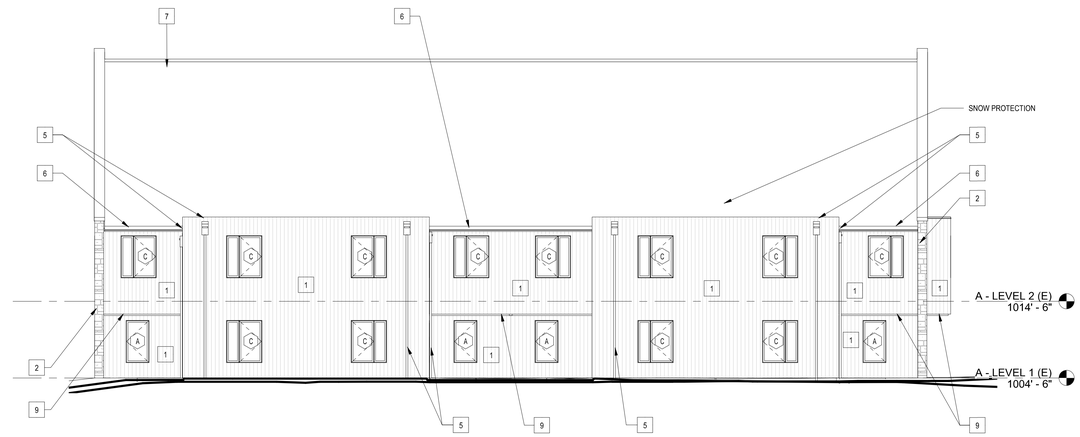

PERCENT GLAZED: 16.7%
1 ELEVATION - 4 PLEX NORTH
1/8" = 1'-0"

PERCENT GLAZED: 5.0%
3 ELEVATION - 4 PLEX WEST
1/8" = 1'-0"

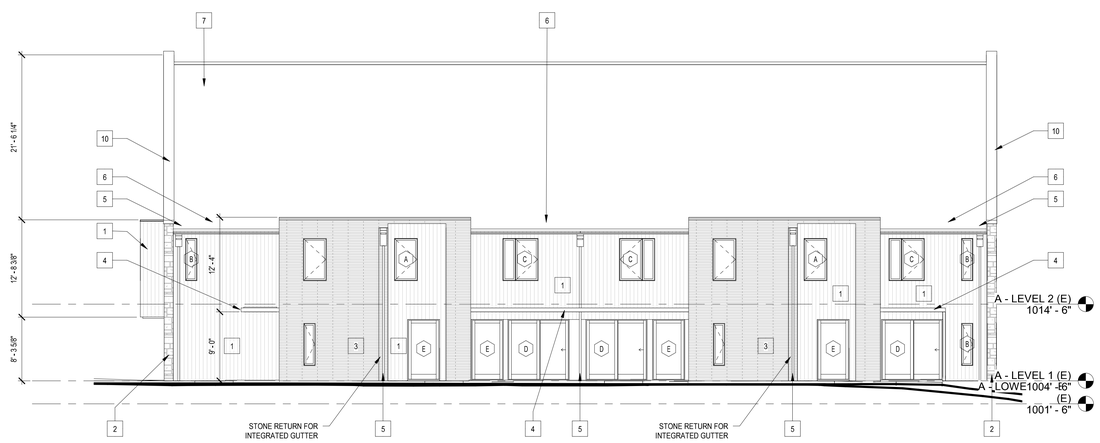

PERCENT GLAZED: 22.8%
2 ELEVATION - 4 PLEX SOUTH
1/8" = 1'-0"

8/10/2020 8:33:25 AM

FOR REFERENCE ONLY

WORKSHOP
WORKSHOP ARCHITECTS, INC

ARCHITECT
WORKSHOP ARCHITECTS
201 E PITTSHBURGH AVENUE, SUITE 301
MILWAUKEE, WI 53204
414.272.8822
WWW.WORKSHOPARCHITECTS.COM

ST. OLAF COLLEGE

PROJECT:
OLE AVENUE PROJECT TOWNHOMES

ADDRESS:
1520 ST OLAF AVENUE NORTHFIELD, MN 55057

ISSUANCE HISTORY - THIS SHEET

△NO.	DESCRIPTION	DATE

WSA PROJECT #: 19-270

DATE: October 12, 2020

ISSUED FOR ZONING- SITE PLAN REVIEW

EXTERIOR ELEVATIONS - 4 PLEX

A202

© COPYRIGHT WORKSHOP ARCHITECTS, INC.

PERCENT GLAZED: 5.0%

3 ELEVATION - 8 PLEX WEST
1/8" = 1'-0"

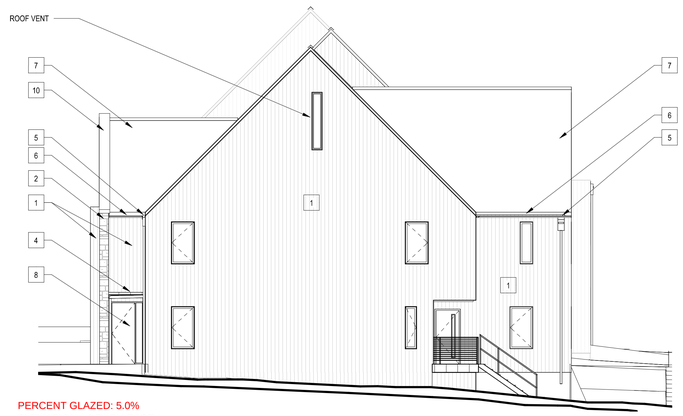

PERCENT GLAZED: 5.0%

4 ELEVATION - 8 PLEX EAST
1/8" = 1'-0"

*BASIS OF DESIGN: ANDERSEN E SERIES

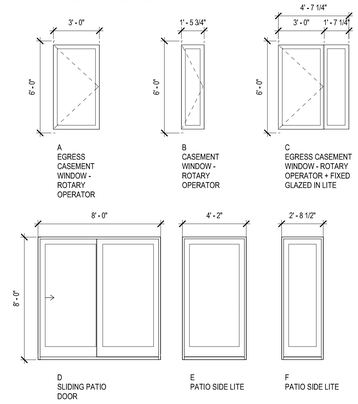

WINDOW LEGEND
1/4" = 1'-0"

GENERAL NOTES - EXTERIOR ELEVATION

A. ELEVATIONS OF EXISTING FLOORS ARE BASED ON SURVEY INFORMATION AND/OR AS-BUILT DRAWINGS PROVIDED BY THE OWNER. THE SURVEY DATA MAY NOT BE COMPLETE AND THE ACTUAL EXISTING ELEVATIONS MAY VARY IN DIFFERENT PORTIONS OF THE EXISTING BUILDING. ALL INFORMATION MUST BE FIELD VERIFIED AND COORDINATED BETWEEN NEW AND EXISTING CONSTRUCTION TO PROVIDE MATCHING FLOOR ELEVATIONS WHERE REQUIRED.

KEYNOTES - EXTERIOR ELEVATION

#	DESCRIPTION
1	6" VERTICAL SIDING - BASIS OF DESIGN: BORAL TRUEXTERIOR - PREFINISHED
2	4" MANUFACTURED CALCIUM SILICATE FULL BED STONE - BASIS OF DESIGN ARRISCRAFT LAURIER - REFER TO WALL SECTION 5/A310
3	4" MANUFACTURED CALCIUM SILICATE FULL BED STONE - BASIS OF DESIGN ARRISCRAFT ARCHITECTURAL LINEAR SERIES BRICK - REFER TO WALL SECTION 5/A310
4	CANOPY - TUBE STEEL FRAME INTERNALLY DRAINED TO ADJACENT ROOF LEADER - UNDERSIDE FINISH TO MATCH VERTICAL SIDING WITH LIGHTING
5	ALUMINUM GUTTER BOX AND ROUND GALVANIZED RAIN LEADER
6	5" SEAMLESS ALUMINUM HALF ROUND GUTTER WITH CRADLE HANGERS
7	MALARKY ASPHALT SHINGLE
8	PAINTED ALUMINUM FLUSH ENTRY DOOR WITH ALUMINUM FRAME AND SIDE LITE TO MATCH PATIO DOOR
9	SOFFIT TO MATCH VERTICAL SIDING WITH LIGHTING
10	METAL CORNICE - ALTERNATE GFOR CAP TO MATCH STONE
11	WOOD DECKING - FSC CERTIFIED HARDWOOD - BASIS OF DESIGN KEBONY

PERCENT GLAZED FOR WHOLE BUILDING : 12.9%

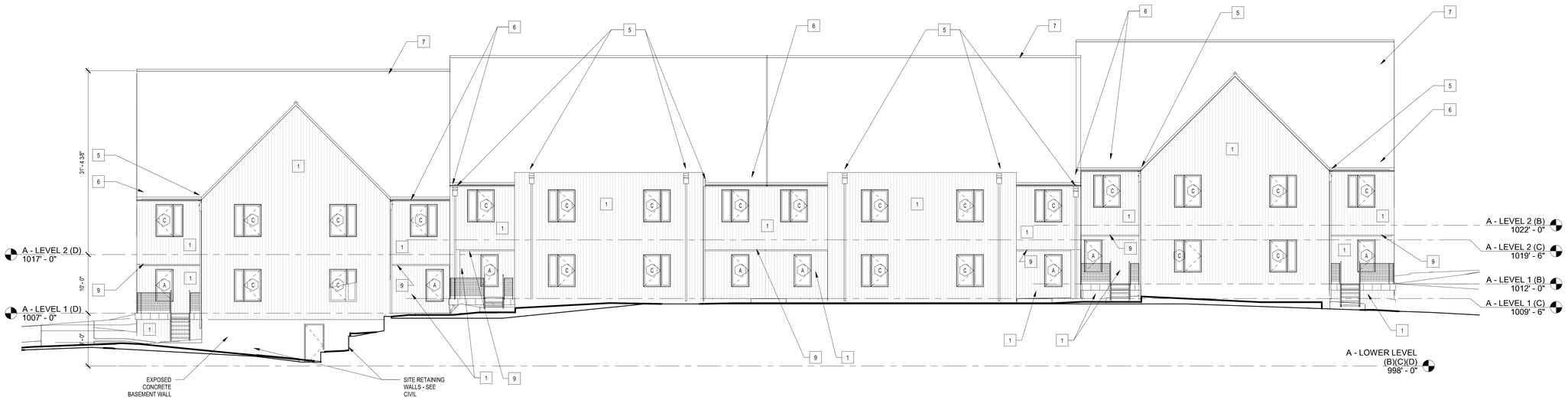

PERCENT GLAZED: 14.0%

2 ELEVATION - 8 PLEX NORTH
1/8" = 1'-0"

PERCENT GLAZED: 25.3%

1 ELEVATION - 8 PLEX SOUTH
1/8" = 1'-0"

8/10/2020 8:33:28 AM

WORKSHOP
WORKSHOP ARCHITECTS, INC

ARCHITECT
WORKSHOP ARCHITECTS
201 E PITTSHBURGH AVENUE, SUITE 301
MILWAUKEE, WI 53204
414.272.8822
WWW.WORKSHOPARCHITECTS.COM

ST. OLAF COLLEGE

PROJECT:
OLE AVENUE PROJECT TOWNHOMES

ADDRESS:
1520 ST OLAF AVENUE NORTHFIELD, MN 55057

ISSUANCE HISTORY - THIS SHEET

△NO.	DESCRIPTION	DATE

WSA PROJECT #: 19-270

DATE: October 12, 2020

ISSUED FOR ZONING- SITE PLAN REVIEW

EXTERIOR ELEVATIONS - 8 PLEX

FOR REFERENCE ONLY

A203

© COPYRIGHT WORKSHOP ARCHITECTS, INC.