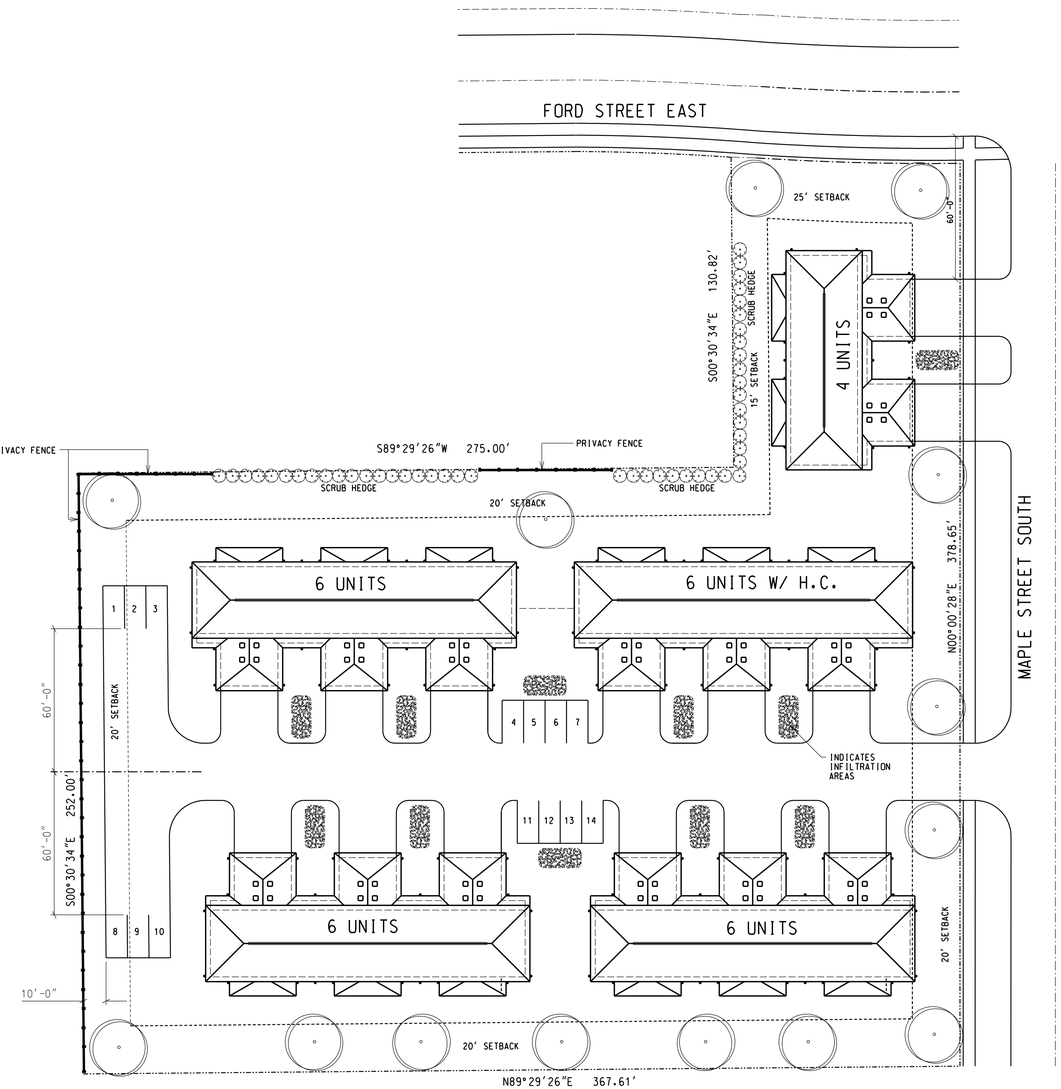

25 OUTLOT A SITE PLAN

SCALE: 1" = 30'-0"

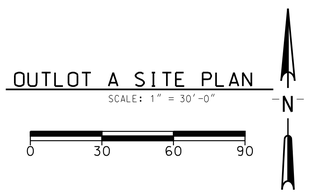

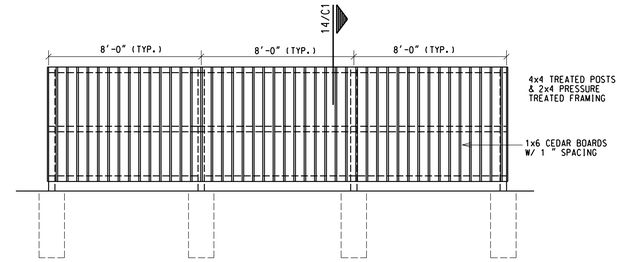

6 PRIVACY FENCE ELEVATION

SCALE: NONE

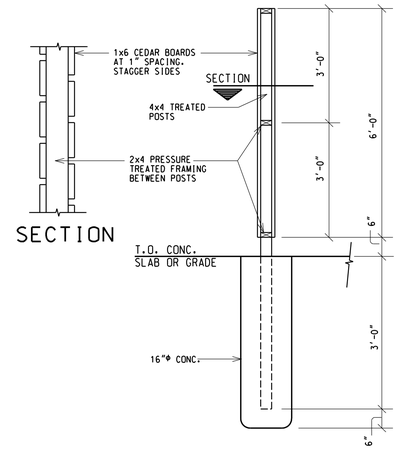

14 PRIVACY FENCE

SCALE: NONE

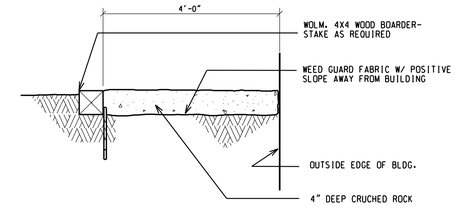

8 ROCK BORDER

SCALE: NONE

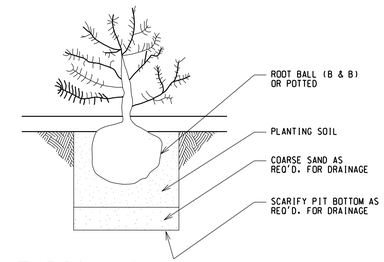

16 TYPICAL PLANTING DETAIL

CONIFEROUS & DECIDUOUS SHRUBS

SCALE: NONE

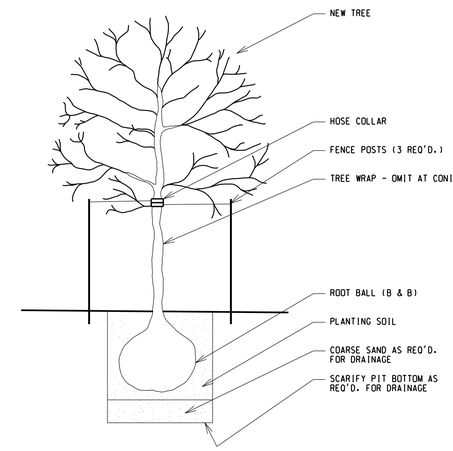

16 TYPICAL PLANTING DETAIL

CONIFEROUS & DECIDUOUS TREES

SCALE: NONE

PLANTING SCHEDULE			
TYPE	NAME	NUMBER	SIZE

PRELIMINARY A

DATE: 2/14/19
FILENAME: 9575C1

Zenk•Read•Trygstad ASSOCIATES, INC.
Engineers/Architects
2846 Sorensen Rd. Albert Lea, MN 56007 507-373-0088

SCHROM CONSTRUCTION
PRELIMINARY TOWNHOUSE PLANS
NORTHFIELD, MINNESOTA

Designed: Survey
Drawn: NGVD
Date: Date
Checked: Mk. Order
Revision
Revision
Revision

I hereby certify that this plan, specification, or report was prepared by me or under my direct supervision and that I am a duly Licensed Professional Engineer under the laws of the State of Minnesota.

Printed Name: Lic. No.
Signature: Date:

SCHEMATIC 6 PLEX
SITE PLAN

Proj. No. 9575
SHEET
C-1
OF
1