HARVEST HILLS SECOND ADDITION
SCHROM CONSTRUCTION
OUTLOT A, HARVEST HILLS
NORTHFIELD, MN

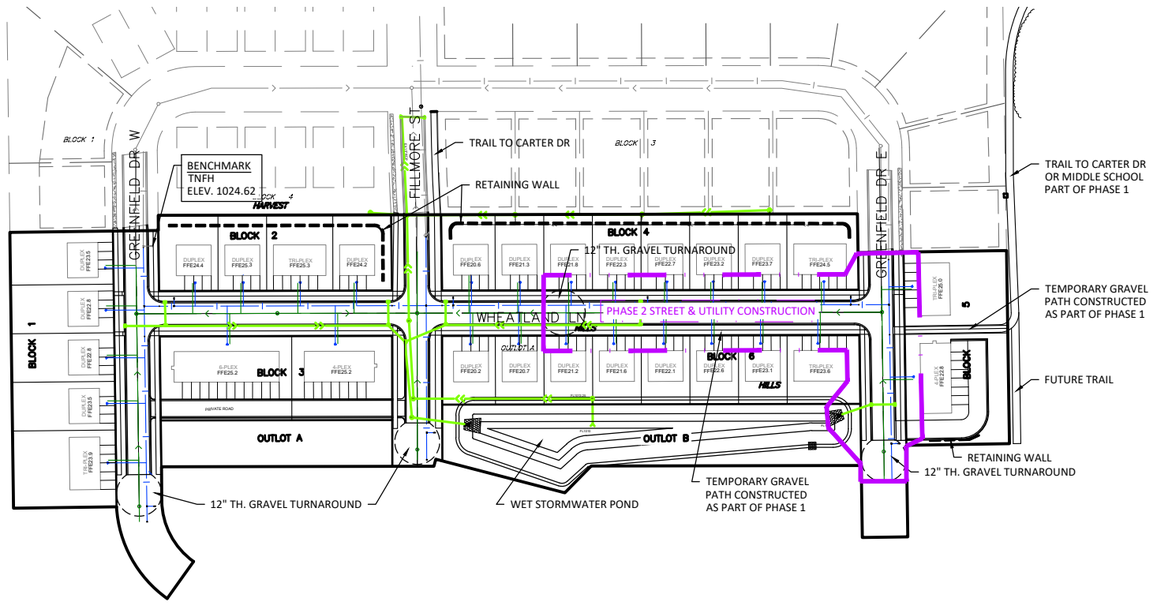

LEGEND

- = Catch Basin
- C = Cable TV
- C&G = Curb and Gutter
- CHL = Chainlink Fence
- CO = Clean Out
- COC = Center of Channel
- CMP = Corrugated Metal Pipe
- CS = Curb Stop
- CI = Cast Iron
- CW = Concrete Sidewalk
- DWY = Driveway
- E = Electric
- E = Electric Meter
- EV = Electric Vault
- = Fire hydrant
- G = Gas Main
- G = Gas Meter
- = Guy Anchor
- IE = Invert Elevation
- = Light Pole
- OH = Overhead
- (P) = Painted Utility Location
- PVC = Polyvinyl Chloride
- = Power Pole
- = Power Pole with luminaire
- (R) = Record Utility Location
- RCP = Reinforced Concrete Pipe
- S = Sanitary Manhole
- = Storm Manhole
- T = Telephone Pedestal
- T = Telephone
- = Traffic flow direction
- = Traffic arrow painted on ground
- UG = Underground
- VCP = Vitrified Clay Pipe
- = Water Main Valve
- = Water Manhole
- W = Water Main
- = Deciduous Tree
- = Coniferous Tree
- = Surface Water Flow Direction

VICINITY MAP

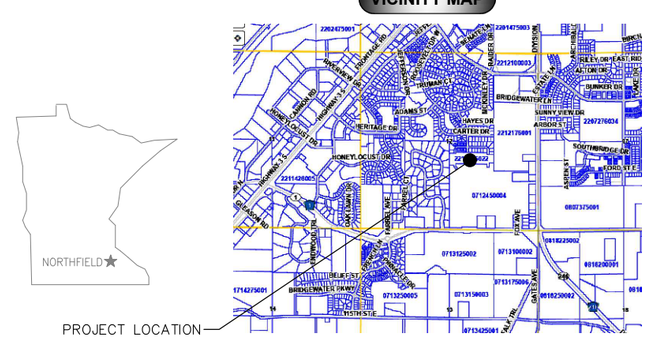

INDEX TO SHEETS

SHEET	SUBJECT
1	TITLE SHEET & LOCATION MAP
2–4	SWPPP NOTES & DETAILS
5–15	DETAILS
16–18	GRADING PLAN
19–24	PLAN AND PROFILES

THIS SET OF PLANS CONTAINS 24 SHEETS

SPECIFICATIONS WHICH APPLY

ALL CONSTRUCTION AND MATERIALS SHALL COMPLY WITH THE MOST RECENT EDITION OF MNDOT STANDARD SPECIFICATIONS FOR CONSTRUCTION, INCLUDING PUBLISHED TECHNICAL MEMORANDA, MINNESOTA PLUMBING CODE, AND WITH THE CITY ENGINEERING STANDARD SPECIFICATIONS FOR WATERMAIN & SERVICE LINE, SANITARY SEWER AND STORM SEWER INSTALLATION (PER "STANDARD UTILITIES SPECIFICATIONS" BY THE CITY ENGINEERS ASSOCIATION OF MINNESOTA), AND THE CITY'S STANDARD DETAILS AND SPECIFICATIONS.

GENERAL NOTES

1. CONTRACTOR AND ALL SUBCONTRACTORS SHALL COMPLY WITH ALL APPLICABLE CODES AND ORDINANCES GOVERNED BY STATE AND LOCAL JURISDICTION.
2. COORDINATE ELECTRIC, GAS & TELEPHONE UTILITY INSTALLATION & ROUTING WITH LOCAL UTILITY COMPANIES
3. ANY ALTERATIONS OR REVISIONS TO THE SITE DEVELOPMENT PLAN AS SHOWN SHALL NOT BE THE RESPONSIBILITY OF JONES, HAUGH & SMITH INC. AND SHALL RELEASE JONES, HAUGH & SMITH INC. OF ANY LIABILITY FOR ANY DAMAGES CAUSED THEREFROM UNLESS WRITTEN AUTHORIZATION OR PLAN REVISION HAS BE APPROVED BY JONES, HAUGH & SMITH INC. PRIOR.
4. CONTRACTOR SHALL BE RESPONSIBLE FOR OBTAINING ALL NECESSARY PERMITS FOR CONSTRUCTION.
5. LANDSCAPING, IRRIGATION, AND LIGHTING NOT A PART OF THIS PLAN.

SWPPP GENERAL NOTES

1. THIS PLAN IS MEANT AND PROVIDED AS A GUIDE IN THE PROVISION OF SEDIMENT AND EROSION CONTROL (ESC) BMP'S AS REQUIRED BY THE NPDES PERMIT.
2. ADDITIONAL EROSION AND SEDIMENT CONTROL MEASURES, ALTHOUGH NOT SHOWN HERE, MAY BE REQUIRED TO COMPLY WITH THE PROVISIONS OF THE PERMIT.
3. PROVISION AND MAINTENANCE OF EROSION AND SEDIMENT CONTROL BMP'S IN ACCORDANCE WITH THE NPDES PERMIT IS THE RESPONSIBILITY OF THE CONTRACTOR, REGARDLESS OF WHAT IS SHOWN ON THIS PLAN.
4. MAINTENANCE OF ESC BMP'S IS INCIDENTAL TO THE WORK.
5. NO ADDITIONAL PAYMENT WILL BE MADE FOR ADDITIONAL EROSION CONTROL BMP'S AS REQUIRED BY THE NPDES PERMIT.
6. THE CONTRACTOR SHALL OBTAIN THE NPDES PERMIT FROM THE MPCA AND PAY ANY APPLICABLE FEES AS WORK INCIDENTAL TO THE CONTRACT.
8. SHOULD MPCA ENFORCEMENT ACTIONS OCCUR, THE CONTRACTOR WILL BE THE CO–PERMITEE RESPONSIBLE FOR CORRESPONDING WITH THE MPCA.
9. THE CONTRACTOR WILL BE PAY ALL FINES IMPOSED BY REGULATING AUTHORITIES DUE TO NON–COMPLIANCE WITH THE TERMS OF THE NPDES PERMIT WITH NO COST TO THE OWNER.

BENCHMARK:

TNFH SOUTH END OF EXISTING GREENFIELD DR W
ELEVATION 1024.62

DESIGN ENGINEER:

I HEREBY CERTIFY THAT THIS PLAN WAS PREPARED BY ME OR UNDER MY DIRECT SUPERVISION AND THAT I AM A DULY LICENSED PROFESSIONAL ENGINEER UNDER THE LAWS OF THE STATE OF MINNESOTA.

JOHN H. SCHULTE V, PE LICENSE NO. 44639

DATED:

The subsurface utility information in this plan is Utility Quality Level D. This Utility Quality Level was determined according to the guidelines of CI/ASCE 38-02, entitled "Standard Guidelines for the collection and depiction of existing subsurface utility data."
Some site improvements and topography may have been concealed by winter conditions at the time of survey.

100 0 100
SCALE IN FEET

COPYRIGHT
by JONES, HAUGH & SMITH INC
This drawing and format are protected by Copyright and all rights are reserved. The use of this drawing and format is strictly prohibited without the written consent and permission of Jones, Haugh & Smith Inc.

No responsibility is accepted for the locations of utilities shown hereon. Verification of actual locations should be requested prior to the commencement of construction or the taking of any other action relying on the actual locations.

GOPHER STATE ONE–CALL: 1–800–252–1166

REV.	BY	DATE
-	-	-

JONES HAUGH SMITH
Engineers + Surveyors
415 West North Street Owatonna, MN 507-451-4598

DESIGNED: JHS5
DRAWN: JHS5
CHECKED: BJJ
Date: 5/14/26
DWG: 23–259

HARVEST HILLS SECOND ADDITION
SCHROM CONSTRUCTION
OUTLOT A HARVEST HILLS
TITLE SHEET

SHEET 1 OF 24

CONSTRUCTION ACTIVITY INFORMATION

PROJECT NAME: HARVEST HILLS SECOND ADDITION
PROJECT LOCATION:
SECTION: SE¼ SECTION 12–T111–R20W
CITY: NORTHFIELD
TOWNSHIP: BRIDGEWATER
COUNTY: RICE

PROJECT SIZE: 10.10 DISTURBED ACRES

PROJECT TYPE: RESIDENTIAL SUBDIVISION

MAJOR SOIL TYPES:
1. 1410B, RACINE SILT LOAM

IMPERVIOUS SURFACE:
EXISTING: 0.00 AC
PROPOSED: 4.54 AC
DIRECT DISCHARGE FROM IMPERVIOUS SURFACE: 0.38 AC

RECEIVING WATERS: CITY OF NORTHFIELD STORM SEWER SYSTEM

DATES OF CONSTRUCTION: SPRING 2026–FALL 2027

OWNER:
SCHROM CONSTRUCTION
NICK KRAFT
1116 N. RIVERFRONT DR
MANKATO, MN 56001
PHONE 507–257–5110

UNDERGROUND UTILITY CONTRACTOR:
TBD

PARTY RESPONSIBLE FOR LONG TERM O&M: OWNER

GENERAL SITE INFORMATION

THIS SITE TREATS STORMWATER VIA A A PERMANENT STORMWATER POND. THE SITE'S STORMWATER POND OR TEMPORARY SEDIMENT BASINS WILL BE PART OF THE FIRST GRADING ACTIVITIES PERFORMED AT THE SITE. THE POND WILL NOT BE DIRECTLY CONNECTED TO ITS OUTLET UNTIL ALL UPSTREAM FEATURES ARE FULLY STABILIZED. PUMPING WILL BE UTILIZED IN THE INTERIM.

IMMEDIATELY FOLLOWING GRADING OF SLOPES OF 3:1 OR GREATER WHICH DRAIN TO WATERS OF THE STATE, SLOPES WILL BE STABILIZED WITH EROSION BLANKET OR HYDROSEEDING OVER A MINIMUM OF 6" OF TOPSOIL.

ALL EROSION CONTROL MEASURES SHALL REMAIN IN PLACE AND BE MAINTAINED IN GOOD CONDITION UNTIL THE SITE HAS BEEN RE–VEGETATED. THE CONTRACTOR MAY REMOVE NECESSARY SILT FENCING TO CONSTRUCT ROADWAYS WHILE MAINTAINING ADEQUATE EROSION CONTROL IN ADJACENT AREAS.

SUFFICIENT TOPSOIL SHALL BE STOCKPILED TO ALLOW FOR THE REPLACEMENT OF A MINIMUM OF 6" OF TOPSOIL FOR DISTURBED AREAS TO BE RE–VEGETATED. STOCKPILES WILL BE STABILIZED WITH TARPS OR SEEDED WITH OATS OR WINTER WHEAT WITHIN 7 DAYS OF COMPLETION, WITH SILT FENCE RINGS IN PLACE PRIOR TO STOCKPILE CONSTRUCTION.

CONTRACTOR WILL SCHEDULE SITE GRADING, UTILITY INSTALLATION, AND GRAVEL SURFACE CONSTRUCTION SO THAT THE GENERAL SITE CAN BE MULCHED AND RE–SEEDED SOON AFTER DISTURBANCE.

DISTURBED AREAS SHALL BE STABILIZED WITHIN 7 DAYS OF CESSATION OF DISTURBANCE. STABILIZATION ACTIVITIES WILL BEGIN IMMEDIATELY AND BE COMPLETED WITHIN 7 DAYS. STABILIZATION WILL BE COMPLETED WITHIN 7 DAYS FOR SLOPES 3:1 AND STEEPER OR WHEN IDENTIFIED AS IMPAIRED.

SILT FENCES WILL BE CHECKED AFTER EACH RAIN EVENT AND DAILY DURING A PROLONGED RAINFALL. IMMEDIATELY REPAIR FAILED OR FAILING MEASURES AND REPORT IN LOG BOOK.
REMOVE SEDIMENT DEPOSITS FROM SILT FENCE AND BALE CHECKS WHEN SEDIMENT REACHES APPROXIMATELY 1/2 THE HEIGHT OF THE BARRIER.

BARRIERS WILL BE REPLACED WHEN THEY DECOMPOSE OR BECOME INEFFECTIVE BEFORE THE BARRIERS ARE NO LONGER NECESSARY. ANY SEDIMENT REMAINING IN–PLACE AFTER THE BARRIERS ARE NO LONGER NECESSARY WILL BE DRESSED TO CONFORM TO EXISTING GRADE, AND PREPARED AND SEEDED WITH THE APPROPRIATE SEED MIX, AS DIRECTED BY THE ENGINEER.

IN THOSE AREAS WHERE WOOD FIBER BLANKET OR OTHER SLOPE STABILIZATION METHODS HAVE FAILED, THE SLOPE SHALL BE REESTABLISHED, SEED AND TOPSOIL REPLACED, AND ADDITIONAL SLOPE TREATMENT INSTALLED AS DIRECTED BY THE ENGINEER.

BARRIERS WILL BE REMOVED WHEN FINAL STABILIZATION OF THE SLOPES HAS BEEN COMPLETED AS DETERMINED BY THE ENGINEER.

NO STORMWATER MITIGATION MEASURES WERE REQUIRED AS A PART OF ENVIRONMENTAL, ARCHAEOLOGICAL OR OTHER REQUIRED LOCAL, STATE, OR FEDERAL REVIEW OF THIS PROJECT.

THIS PROJECT IS NOT LOCATED IN A KARST AREA NECESSITATING MEASURES TO PROTECT DRINKING WATER SUPPLY.

EROSION PREVENTION PRACTICES

APPROPRIATE CONSTRUCTION PRACTICES WILL BE USED TO MINIMIZE EROSION. AREAS OF NON–DISTURBANCE WILL BE DELINEATED (FLAGGED, ETC.) ON THE SITE BEFORE WORK BEGINS.

CONTRACTOR SHALL PHASE CONSTRUCTION, MAINTAIN VEGETATIVE BUFFER STRIPS, AND PROVIDE HORIZONTAL SLOPE STAKING IN ORDER TO MINIMIZE EROSION. SUGGESTED CONSTRUCTION SEQUENCING TO MINIMIZE EXPOSED AREAS SUBJECT TO EROSION HAS BEEN SHOWN, BUT ULTIMATE SEQUENCING IS UP TO THE CONTRACTOR. THE SWPPP ON–SITE WILL BE RED–LINED BY THE CONTRACTOR TO INDICATE FINAL SEQUENCING.

DOWNSTREAM SILT FENCE AND INLET PROTECTION DEVICES WILL BE INSTALLED PRIOR TO EARTH MOVING ACTIVITIES.

SLOPES SHALL BE "CAT–TRACKED" WHEN COMPLETE SUCH THAT THE TRACK DEPRESSIONS ARE PERPENDICULAR TO DRAINAGE FLOW.

SILT FENCE SHALL BE INSTALLED BEFORE WORK BEGINS. SILT FENCE LIMITS SHALL COINCIDE WITH DOWNGRADE GRADING LIMITS UNLESS OTHERWISE NOTED.

SILT FENCE USED ON SLOPES SHALL BE PLACED SUCH THAT 100 LINEAL FEET OF SILT FENCE STABILIZES APPROXIMATELY 0.25 ACRES OF DRAINAGE.

THE WETTED PERIMETER OF DRAINAGE SWALES WILL BE STABILIZED WITH RAPID STABILIZATION MEASURES WITHIN 200' OF THE SITE BOUNDARY LINE WITHIN 24 HOURS.

PIPE OUTLETS WILL BE PROVIDED WITH ENERGY DISSIPATION (RIP RAP) WITHIN 24 HOURS OF CONNECTION TO WATERS OF THE STATE.

IF NOT SHOWN ON THE PLAN: ALL EXPOSED SOIL AREAS WITHIN 200' OF SURFACE WATER OR A STORMWATER CONVEYANCE WHICH HAVE CONTINUOUS POSITIVE SLOPES WILL HAVE TEMPORARY EROSION PROTECTION OR PERMANENT COVER FOR THE EXPOSED SOILS YEAR–ROUND, ACCORDING TO THE FOLLOWING TABLE OF SLOPES AND TIME FRAMES:

GRADE OF SLOPE	TIME (MAX.)	BMP
STEEPER THAN 3:1	7 DAYS	RAPID STABILIZATION METHOD 4
4:1 TO 3:1	7 DAYS	RAPID STABILIZATION METHOD 2
FLATTER THAN 4:1	7 DAYS	TYPE 1 DISC ANCHORED MULCH

STABILIZATION WILL COMMENCE IMMEDIATELY UPON COMPLETION OF GRADING AND BE COMPLETE WITHIN THE STATED TIMEFRAME UNLESS FURTHER GRADING ACTIVITIES WILL COMMENCE PRIOR TO COMPLETION DATE. FROZEN GROUND IS CONSIDERED STABILIZED.

CUT AREAS WHERE NO GRADING HAS OCCURRED WITHIN 7 DAYS WILL BE STABILIZED USING BIO–ROLLS A MINIMUM OF EVERY 20 LINEAL FEET IN ORDER TO PREVENT EROSION.

FILL SLOPES WHICH DRAIN TO WATERS OF THE STATE OR OFFSITE SHALL BE STABILIZED IMMEDIATELY UPON CESSATION OF GRADING ACTIVITIES. THUS, IF SLOPES ARE BROUGHT TO SUBGRADE ELEVATION AND WILL CEASED BEING WORKED ON UNTIL TOPSOIL RE–SPREADING, THEY WILL BE STABILIZED IN THE INTERIM. STABILIZE SLOPES WITH INTERIM LINES OF SILT FENCE OR BIO–ROLLS EVERY 20 LINEAL FEET.

SOIL STOCKPILES WHICH REMAIN UNWORKED FOR MORE THAN 7 DAYS WILL BE STABILIZED WITH SEED AND MULCH OR TARPS WITH SILT FENCE RINGS IN PLACE PRIOR TO STOCKPILE CONSTRUCTION. DO NOT LOCATE STOCKPILES IN BUFFERS OR SURFACE WATERS.

IF THIS PROJECT IS SUBJECT TO A DNR WORK IN WATERS RESTRICTIONS DURING FISH SPAWNING TIMES, EXPOSED SOIL AREAS MUST BE STABILIZED WITHIN 24 HOURS DURING THE SPAWNING PERIOD.

THE WETTED PERIMETER OF THE LAST 200' OF DRAINAGE SWALES WILL BE STABILIZED WITHIN 24 HOURS OF CONNECTING TO A SURFACE WATER OR PROPERTY LINE. DO NOT USE MULCH, TACKIFIER OR SIMILAR EROSION PREVENTION MEASURES IF THE SLOPES OF SWALES ARE GREATER THAN 2%.

SEDIMENT CONTROL PRACTICES

CONTRACTOR SHALL FURNISH, INSTALL, AND MAINTAIN:
SEDIMENT CONTROLS FOR TEMPORARY AND PERMANENT DRAINAGE BASINS AND DRAINAGE DITCHES THAT ARE A PART OF THIS DESIGN, AND UPGRADIENT OF ANY BUFFER ZONES, INCLUDING:

- CHECK DAMS AND/OR WOOD FIBER BLANKETS TO ENSURE SHEET FLOW AND PREVENT RILLS FOR SLOPE LENGTHS GREATER THAN 75' WITH A SLOPE OF 3:1 OR GREATER (SEE NOTES ON BIO–ROLLS SPACED EVERY 20' ABOVE)
- SILT FENCE AT ALL DOWN GRADIENT PERIMETERS INSTALLED PRIOR TO ALL LAND DISTURBING ACTIVITIES
- INLET PROTECTION AT ALL DRAIN INLETS INCLUDING NEWLY CONSTRUCTED CATCH BASINS, INCLUDING CATCH BASIN STRUCTURES PRIOR TO CASTING INSTALLATION, AND SANITARY SEWER STRUCTURES.
- SILT FENCING AROUND TEMPORARY SOIL STOCKPILES
- ROCK OR WOOD CHIP CONSTRUCTION SITE ENTRANCES
- DAILY STREET SWEEPING OF TRACKED SEDIMENT ONTO PAVED SURFACES
- CONCRETE TRUCKS SHALL PERFORM WASHOUT ACTIVITIES OFFSITE

TYPICALLY, UTILIZE THE PERMANENT STORMWATER PONDS FOR TEMPORARY SEDIMENTATION. IF AN AREA GREATER THAN 5 ACRES IS DESIGNED TO EVENTUALLY DRAIN TO A FILTRATION OR INFILTRATION BASIN, CONSTRUCT A TEMPORARY SEDIMENTATION BASIN UPSTREAM OF ULTIMATE BASIN.
CLEAN OUT TEMPORARY BASINS WHEN SEDIMENT DEPTH REACHES ½ VOLUME WITHIN 72 HOURS OF DISCOVERY.

IF SURFACE WATER IS TO DISCHARGE OFFSITE BEFORE TREATMENT, DIRECT TO VEGETATED AREAS.

DEWATERING AND BASIN DRAINING

CONTRACTOR SHALL PROVIDE PERMITS FOR ALL DEWATERING ACTIVITIES (INCIDENTAL TO CONSTRUCTION)
ALL DEWATERING ACTIVITIES SHALL DISCHARGE TO A TEMPORARY SEDIMENTATION BASIN OR DEWATERING BASIN CONSTRUCTED NEAR OR PART OF THE PERMANENT STORMWATER BASIN.

THE DEWATERING OR TEMPORARY SEDIMENT BASINS WILL BE PUMPED THROUGH A FILTRATION SYSTEM CONSTRUCTED BY THE CONTRACTOR PRIOR TO DISCHARGE. NO BACKWASHING OF FILTERS ON–SITE.

DEWATERING CHANNELS WHICH ARE OVER LAND SHALL BE PROTECTED FROM EROSION. PLACE END OF HOSE ON FABRIC OR PLASTIC TO PREVENT EROSION.

CLEAN OUT TEMPORARY SEDIMENT BASINS TO DESIGN VOLUME AFTER SEDIMENT REACHES 1/2 DESIGN VOLUME.

CONSTRUCT DEWATERING ACTIVITIES SUCH THAT THEY WILL NOT CAUSE NUISANCE CONDITIONS, EROSION IN RECEIVING CHANNELS OR ON DOWN SLOPE PROPERTIES OR ADVERSELY AFFECT WETLANDS.

ADDITIONAL BMP'S FOR SPECIAL WATERS

THIS PROJECT DOES NOT DISCHARGE TO SPECIAL WATERS OR HAVE SIGNIFICANT IMPACTS TO WETLANDS

ADDITIONAL MEASURES HAVE BEEN INCLUDED AS RELATED TO IMPAIRMENTS OF THE CANNON RIVER WHICH IS WITHIN 1 MILE OF THE DISCHARGE POINT. ITEMS 23.9, 23.10 AND 23.11 OF THE NPDES GENERAL STORMWATER PERMIT ARE INCLUDED.

INSPECTIONS AND MAINTENANCE

CONTRACTOR SHALL INSPECT AND MAINTAIN MEASURES AT MINIMUM ONCE EVERY (7) DAYS DURING ACTIVE CONSTRUCTION, AND WITHIN 24 HOURS AFTER A RAINFALL EVENT OF 0.5" IN 24 HOURS. ALSO INSPECT AREAS ADJACENT TO THE SITE FOR ROGUE EROSION OR SEDIMENT.

DEWATERING DISCHARGE POINTS WILL BE PHOTOGRAPHED DAILY WITH RECORDS MAINTAINED IF DISCHARGE REACHES A SURFACE WATER.

INSPECTIONS WILL INCLUDE STABILIZED AREAS, EROSION PREVENTION AND SEDIMENT CONTROLS, AGGREGATE SURFACES, DISCHARGE CHANNELS AND DEVICES, PERMANENT STORMWATER BMP'S AND RECEIVING STORM SEWER FACILITIES.

STABILIZED AREAS WILL BE INSPECTED ONCE PER MONTH. WHERE WORK HAS BEEN SUSPENDED DUE TO FROZEN GROUND CONDITIONS, INSPECTIONS AND MAINTENANCE WILL TAKE PLACE AS SOON AS FIRST RUNOFF OCCURS AT THE SITE OR PRIOR TO RESUMING CONSTRUCTION, WHICHEVER COMES FIRST.

CONSTRUCTION SITE VEHICLE ENTRANCES WILL BE INSPECTED FOR EVIDENCE OF OFF–SITE SEDIMENT BEING TRACKED ONTO PAVED SURFACES DAILY. TRACKED SEDIMENT MUST BE REMOVED FROM ALL OFF–SITE PAVED SURFACES WITHIN 24 HOURS OF DISCOVERY.

THE INSPECTION LOG MUST INCLUDE THE: DATE AND TIME, NAME OF INSPECTOR, FINDINGS INCLUDING SPECIFIC LOCATIONS OF CORRECTIONS REQUIRED, CORRECTIVE ACTIONS TAKEN WITH DATE AND TIME, RAINFALL AMOUNTS AND DATES VIA RAIN GAUGE OR WEATHER STATION WITHIN 1 MILE, DOCUMENTATION OF SEDIMENT DISCHARGE FROM SITE WITH PHOTOGRAPHS.

REPAIR ALL NONFUNCTIONAL BMP'S BY THE END OF THE NEXT BUSINESS DAY OR AS SOON AS FIELD CONDITIONS ALLOW.

RECORDS RETENTION

CONTRACTOR SHALL MAINTAIN RECORDS OF THE SEDIMENT RETENTION PROCEDURES ON–SITE. RECORDS WILL INCLUDE:
COPY OF THE SWPPP AND ANY CHANGES
INSPECTION AND MAINTENANCE RECORDS
PERMANENT OPERATION AND MAINTENANCE AGREEMENTS
CALCULATIONS FOR THE DESIGN OF TEMPORARY AND PERMANENT STORMWATER MANAGEMENT SYSTEMS

POLLUTION PREVENTION MANAGEMENT MEASURES

SOLID WASTE:
COLLECTED SEDIMENT, ASPHALT AND CONCRETE MILLINGS, FLOATING DEBRIS, PAPER, PLASTIC, FABRIC, CONSTRUCTION AND DEMOLITION DEBRIS AND OTHER WASTES MUST BE DISPOSED OF PROPERLY AND MUST COMPLY WITH MPCA DISPOSAL REQUIREMENTS.
SIGNED SEPARATE DISPOSAL BINS WITH A SIGN REQUIRING USE OF SAID BINS WILL BE INSTALLED AND UTILIZED.

CONCRETE AND OTHER WASHOUTS:
PERFORM ALL CONCRETE TRUCK WASHOUTS OFFSITE.

SOLID AND LIQUID WASHOUT WASTE FROM OTHER MATERIALS (STUCCO, PAINT, FORM RELEASE OILS CURING COMPOUNDS ETC.) WILL BE DISPOSED OF IN A PROPERLY DESIGNATED LANDFILL.

PERFORM ALL HANDTOOLS WASHOUTS IN A LEAKPROOF CONTAINMENT FACILITY OR IMPERMEABLE LINER THAT PREVENTS RUNOFF ONTO ADJACENT SOILS.
DEBRIS/SEDIMENT WILL NOT CONTACT THE GROUND SURFACE. A SIGN REQUIRING USE OF PROPER WASHOUT FACILITIES WILL BE INSTALLED ADJACENT TO SAID FACILITIES.

HAZARDOUS MATERIALS:
OIL, GASOLINE, PAINT AND ANY HAZARDOUS SUBSTANCES WILL BEE PROPERLY STORED, INCLUDING SECONDARY CONTAINMENT TO PREVENT SPILLS, LEAKS, OR OTHER DISCHARGE. RESTRICTED ACCESS TO STORAGE AREAS WILL BE PROVIDED TO PREVENT VANDALISM. STORAGE AND DISPOSAL OF HAZARDOUS WASTE WILL BE IN COMPLIANCE WITH MPCA
REGULATIONS.
PLASTIC SHEETING UNDER AN ABSORBENT MATERIAL WILL BE PLACED ON THE GROUND NEAR FUEL STORAGE TANKS TO PREVENT SPILLS WHEN LOADING OR UNLOADING THE TANKS.
SPILL KITS WILL BE PROVIDED NEAR STORAGE.

EXTERNAL WASHING OF TRUCKS AND OTHER CONSTRUCTION VEHICLES IS NOT ALLOWED ON–SITE.
NO ENGINE DEGREASING IS ALLOWED ON SITE.

NO FLOCCULENTS ARE BEING UTILIZED TO ENHANCE SEDIMENTATION IN RETENTION FACILITIES.

PORTABLE TOILETS WILL BE SECURED.

SWPPP IMPLEMENTATION CHAIN OF RESPONSIBILITY

THE GENERAL CONTRACTOR SHALL PROVIDE A TRAINED, CERTIFIED, KNOWLEDGEABLE PERSON WHO SHALL SERVE AS THE SITE'S EROSION CONTROL INSPECTOR. THIS PERSON SHALL BE RESPONSIBLE FOR INSTALLATION AND MAINTENANCE OF EROSION AND SEDIMENT CONTROL BMP'S, AND SHALL MAINTAIN THE INSPECTION LOG AT THE PROJECT SITE.

EACH SUBCONTRACTOR ON–SITE WILL DESIGNATE AN EMPLOYEE AS ITS PROJECT SWPPP OFFICER. A LIST OF THESE OFFICERS WITH CONTACT INFORMATION WILL BE AVAILABLE ON–SITE. IT WILL BE SOLELY THE SWPPP OFFICERS' RESPONSIBILITY TO ENSURE THAT ALL ON–SITE ACTIVITIES PERFORMED BY ITS COMPANY COMPLY WITH THE SWPPP. THE GENERAL CONTRACTOR'S SWPPP INSPECTOR WILL HAVE AUTHORITY OVER ALL SUBCONTRACTOR'S SWPPP OFFICERS FOR WORK PERTAINING TO COMPLIANCE.

NOTE THE PERSONS RESPONSIBLE FOR EACH CONTRACTOR IN THE SWPPP.

SHOULD A SWPPP OFFICER FAIL TO ENSURE COMPLIANCE, THAT OFFICER'S FOREMAN OR DIRECT SUPERVISOR WILL ASSUME ALL RESPONSIBILITY.

SHOULD A SUBCONTRACTOR FAIL TO COMPLY WITH THE SWPPP, THE GENERAL CONTRACTOR WILL ASSUME ALL RESPONSIBILITY FOR COMPLIANCE.

SHOULD THE GENERAL CONTRACTOR FAIL TO COMPLY WITH THE SWPPP, THE OWNER WILL ASSUME ALL RESPONSIBILITY FOR COMPLIANCE.

SWPPP AMENDMENTS

THE CONTRACTOR IS RESPONSIBLE FOR DOCUMENTING CHANGES TO THE SWPPP VIA MARKUPS ON THE ON–SITE SWPPP DOCUMENTS. SHOULD ADDITIONAL MEASURES BE NEEDED BEYOND THE CAPABILITY OF THE CONTRACTOR, THE CONTRACTOR WILL CONTACT THE SWPPP DESIGNER FOR ASSISTANCE.

PERMIT TERMINATION CONDITIONS

THE CONTRACTOR WILL BE A CO–PERMITEE DURING THE CONSTRUCTION OF THE PROJECT. AFTER DESIGNATED SURFACING OF THE PROJECT HAS BEEN COMPLETED, 70% PERMANENT VEGETATIVE COVER HAS BEEN ESTABLISHED OVER THE PERVIOUS AREAS OF THE SITE, THE PERMANENT STORMWATER TREATMENT FACILITIES ARE OPERATING AS DESIGNED AND HAVE BEEN RETURNED TO DESIGN CAPACITY, ANY SEDIMENT HAS BEEN REMOVED FROM STORMWATER CHANNELS, TEMPORARY EROSION AND SEDIMENT CONTROL DEVICES HAVE BEEN REMOVED, DATED PHOTOGRAPHS OF THE SITE SHOWING FINAL STABILIZATION HAVE BEEN SUBMITTED TO THE OWNER, THE OWNER WILL, WITHIN 30 DAYS, SUBMIT THE NOTICE OF TERMINATION (NOT) AND DATED PHOTOGRAPHS TO THE MPCA.

NOTIFICATION OF THE MPCA IN CASE OF POLLUTION

IT IS THE DUTY OF THE CONTRACTOR TO NOTIFY THE MPCA IMMEDIATELY OF ANY DISCHARGE, ACCIDENTAL OR OTHERWISE, OF ANY SUBSTANCE OR MATERIAL UNDER HIS CONTROL WHICH, IF NOT RECOVERED, MAY CAUSE POLLUTION OF WATERS OF THE STATE, AND THE CONTRACTOR SHALL RECOVER AS RAPIDLY AND THOROUGHLY AS POSSIBLE SUCH SUBSTANCE OR MATERIAL AND TAKE IMMEDIATELY SUCH OTHER ACTION AS MAY BE REASONABLY POSSIBLE TO MINIMIZE OR ABATE POLLUTION OF WATERS OF THE STATE CAUSED THEREBY.

SEDIMENT LEAVING THE CONSTRUCTION SITE AND ENTERING A PUBLIC WATER IS CAUSE FOR NOTIFICATION.

PETROLEUM SPILLS LARGER THAN 5 GALLONS MUST BE REPORTED.

MINNESOTA DUTY OFFICER: 800-422-0798

DISCUSSION OF INFILTRATION VIABILITY

SOILS AT THE SITE ARE GENERALLY POORLY DRAINED, RESULTING IN SEASONALLY SATURATED SOILS NEAR THE SURFACE. THIS ELEVATED WATER TABLE COMBINED WITH SITE GRADING REQUIREMENTS PRECLUDES INFILTRATION AS A METHOD OF STORMWATER TREATMENT AS IT IS INFEASIBLE TO OBTAIN 3' OF VERTICAL SEPARATION OF BETWEEN POTENTIAL TREATMENT DEVICES AND SEASONALLY SATURATED SOILS.

IRRIGATION IS PROPOSED AS A MEASURE OF VOLUME CONTROL.

QUALIFIED SWPPP PERSONNEL INFORMATION

CERTIFIED SWPPP DESIGNER:
JOHN H. SCHULTE V, PE
JONES HAUGH & SMITH, INC.
515 SOUTH WASHINGTON AVE
ALBERT LEA, MN 56007
(507) 451–4598

DATES OF LAST TRAINING: 1/5/24 Expires 2027
CONTENT: U of M DESIGN OF CONSTRUCTION SWPPP

CERTIFIED EROSION CONTROL SUPERVISOR:

NAME: _____
FIRM: _____
ADDRESS: _____
_____
PHONE: _____
DATES OF LAST TRAINING: _____
CONTENT: _____

CERTIFIED SWPPP INSTALLER:

NAME: _____
FIRM: _____
ADDRESS: _____
_____
PHONE: _____
DATES OF LAST TRAINING: _____
CONTENT: _____

CERTIFIED SWPPP INSPECTOR:

NAME: _____
FIRM: _____
ADDRESS: _____
_____
PHONE: _____
DATES OF LAST TRAINING: _____
CONTENT: _____

GRADING CONTRACTOR:

NAME: _____
FIRM: _____
ADDRESS: _____
_____
PHONE: _____

OTHER LAND DISTURBING CONTRACTOR:

NAME: _____
FIRM: _____
ADDRESS: _____
_____
PHONE: _____

OTHER LAND DISTURBING CONTRACTOR:

NAME: _____
FIRM: _____
ADDRESS: _____
_____
PHONE: _____

REV.	BY	DATE	REVISION DESCRIPTION
-	-	-	-

JONES HAUGH SMITH
Engineers + Surveyors
415 West North Street Owatonna, MN 507-451-4598

DESIGNED: JHS5
DRAWN: JHS5
CHECKED: BJJ
Date: 5/14/26
DWG: 23–259

I hereby certify that this plan, specification, or report was prepared by me or under my direct supervision and that I am a duly Licensed Professional Engineer under the laws of the State of Minnesota.

John H. Schulte V
License No. 44639 Date: 5/14/26

HARVEST HILLS SECOND ADDITION
SCHROM CONSTRUCTION
OUTLOT A HARVEST HILLS
SWPPP NARRATIVE

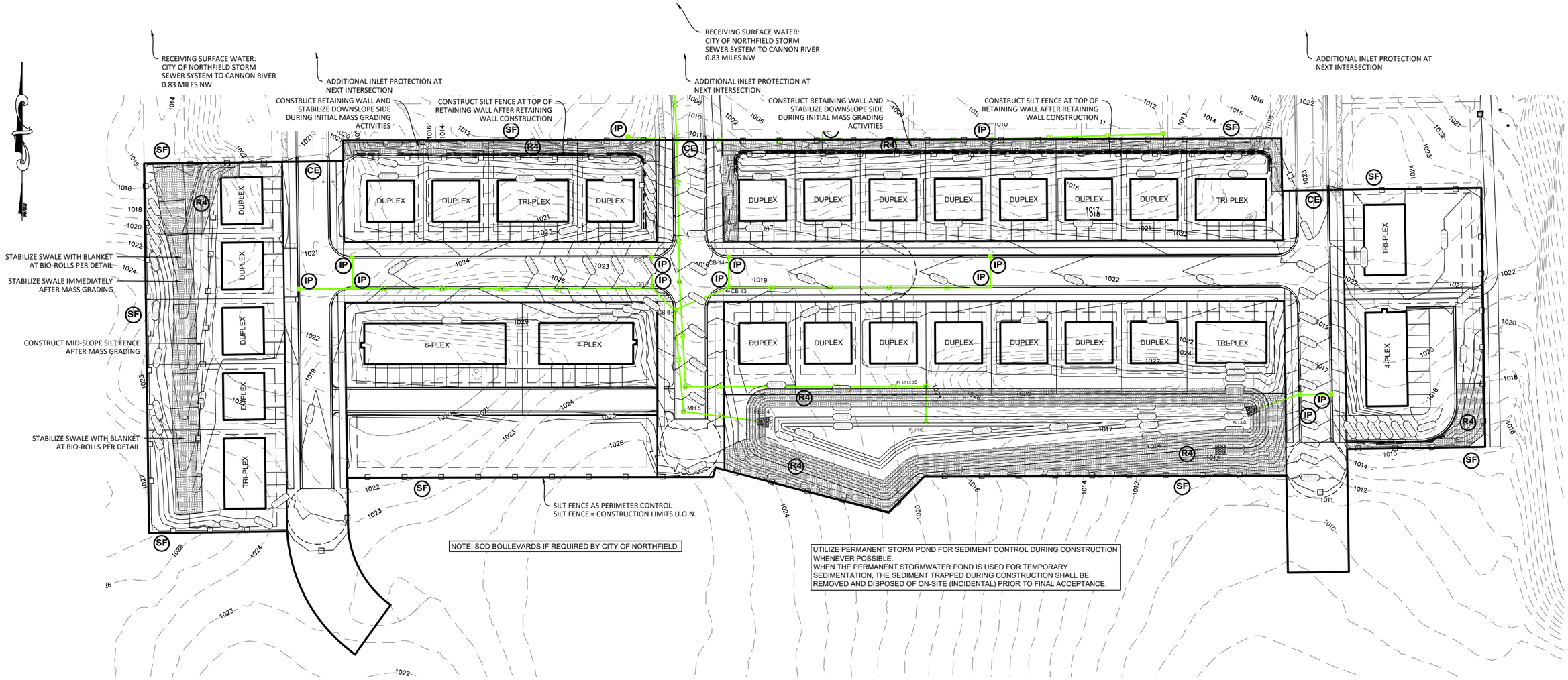

LEGEND

—848—	EXISTING ELEVATION CONTOUR LINE
—848—	PROPOSED ELEVATION CONTOUR LINE
IP	CATCH BASIN INLET PROTECTION
CE	CONSTRUCTION ENTRANCE
SF	SILT FENCE - MACHINE SLICED
R4	RAPID STABILIZATION METHOD 4

TURF ESTABLISHMENT

1. PROVIDE A MINIMUM OF 6" OF TOPSOIL OVER ALL AREAS DESIGNATED TO RECEIVE TURF.
2. STABILIZE ALL OTHER DISTURBED AREAS OF THE SITE NOT SHOWN TO RECEIVE SPECIAL TREATMENT ON THIS PLAN IN ACCORDANCE WITH THE LANDSCAPE PLAN OF IF NOT SHOWN, WITH HYDROSEED MIXTURE AS MNDOT RAPID STABILIZATION METHOD 3 WITH:
   SEED MIX 25-131 @ 100 LB/ACRE,
   FERTILIZER 22-5-10 @ 300 LBS/ACRE
   TYPE 1 HYDRAULIC SOIL STABILIZER

WINTER STABILIZATION

IN THE EVENT THAT FINAL STABILIZATION OF THE SITE HAS NOT OCCURRED PRIOR TO WINTER CONDITIONS, THE FOLLOWING ACTIVITIES WILL OCCUR:

1. STABILIZE ALL AREAS DESIGNATED TO RECEIVE TURF WITH SODDING OR SEED MIX 22-112 @ 40 LB/ACRE WITH SEED MIX 21-112 (WINTER WHEAT) @ 100 LB/ACRE, AND TYPE 1 MULCH FROZEN TO GROUND WITH WATER
2. SPOT CHECK AND STABILIZE ALL AREAS ALREADY STABILIZED WITH THE ABOVE

REQUIRED BMP INSPECTION & MAINTENANCE SCHEDULE

Item	Frequency
PERIMETER SILT FENCE/BIO-ROLL	WEEKLY OR AFTER EACH 0.5" RAIN EVENT. CLEAN WHEN DEVICES REACH 50% CAPACITY
INLET PROTECTION	WEEKLY OR AFTER EACH 0.5" RAIN EVENT. CLEAN WHEN DEVICES REACH 50% CAPACITY
ROCK CONSTRUCTION ENTRANCE	WEEKLY OR AFTER EACH 0.5" RAIN EVENT
STREET SWEEPING	DAILY
PERMANENT STABILIZATION	WEEKLY OR AFTER EACH 0.5" RAIN EVENT UNTIL 100% OF STABILIZED AREA REACHES 70% COVERAGE

50 0 50
HORIZ. SCALE FEET
DRAWINGS ON 11x17 SHEETS ARE HALF SCALE

REV.	BY	DATE	REVISION DESCRIPTION
-	-	-	-

JONES HAUGH SMITH
Engineers + Surveyors
415 West North Street Owatonna, MN 507-451-4598

DESIGNED: JHS5
DRAWN: JHS5
CHECKED: BJJ
Date: 5/14/26
DWG: 23-259

I hereby certify that this plan, specification, or report was prepared by me or under my direct supervision and that I am a duly Licensed Professional Engineer under the laws of the State of Minnesota.

John H. Schulte V
License No. 44639 Date: 5/14/26

HARVEST HILLS SECOND ADDITION
SCHROM CONSTRUCTION
OUTLOT A HARVEST HILLS
SWPPP & GRADING PLAN

SHEET 3 OF 24

SOILS MAP

MAP OF SURFACE WATERS

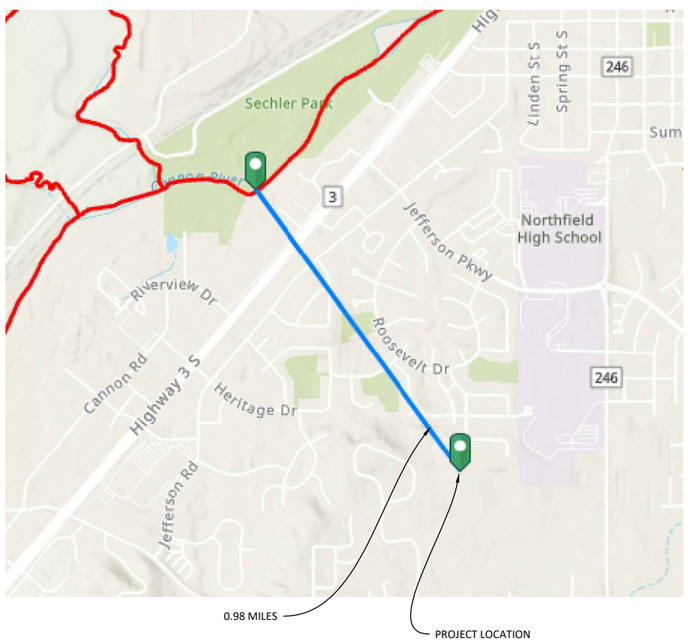

SPACING OF CHECKS:

SPACING (FT) = $\frac{\text{HEIGHT OF CHECK (FT) X 100}}{\text{DITCH GRADE (\%)}}$

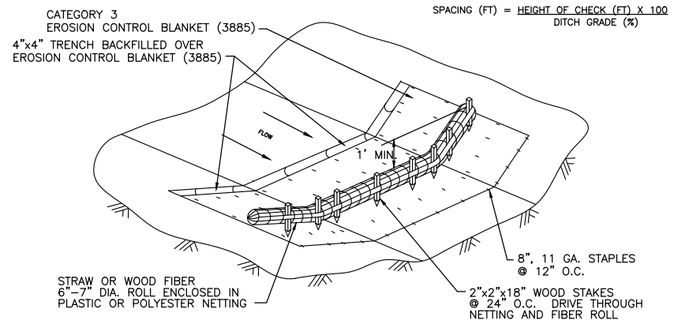

BIO–ROLL BLANKET AND/OR BIO–ROLL DITCH CHECK

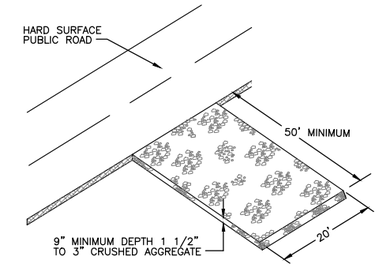

NOTES:
1. FILTER FABRIC SHALL BE PLACED UNDER ROCK TO STOP MIGRATION OF MUD THROUGH ROCK.
2. ENTRANCE MUST BE REGULARLY MAINTAINED TO PREVENT SEDIMENTATION ON PUBLIC ROADWAYS. FUGITIVE ROCK WILL BE REMOVED FROM ADJACENT ROADWAYS DAILY OR MORE FREQUENTLY AS NECESSARY.

EROSION CONTROL PROTECTION AT CONSTRUCTION ACCESS

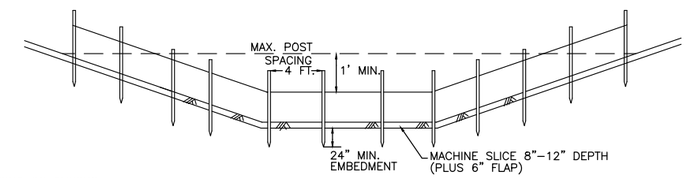

SPACING OF CHECKS:

SPACING (FT) = $\frac{\text{HEIGHT OF CHECK (FT) X 100}}{\text{DITCH GRADE (\%)}}$

NOTE:
REMOVE SEDIMENT OR REPLACE FENCE WHEN SEDIMENT REACHES 1/3 HEIGHT OF FENCE

SILT FENCE DITCH CHECK

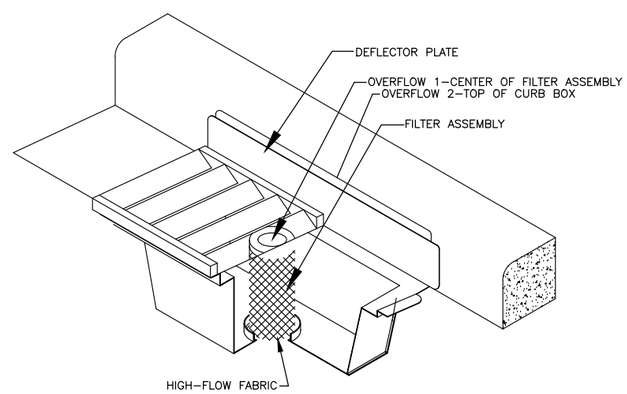

CATCH BASIN INLET PROTECTION

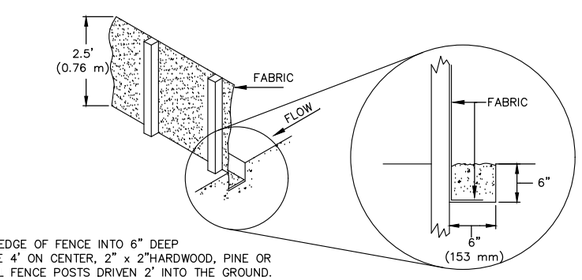

NOTES:
1. PLACE BOTTOM EDGE OF FENCE INTO 6" DEEP
2. POSTS SHALL BE 4' ON CENTER, 2" x 2"HARDWOOD, PINE OR STANDARD STEEL FENCE POSTS DRIVEN 2' INTO THE GROUND.

ALTERNATE PERIMETER CONTROL METHODS, INCLUDING TOPSOIL BERMS WILL FOLLOW MNDOT SPECIFICATIONS INCLUDING:

TOPSOIL
TOPSOIL EXCAVATION MATERIAL PER 2105, TRAPEZOID SHAPE WITH 7 FT. BASE WIDTH, MIN. HEIGHT 2 FT., AND 2:1 (V:H) SIDE SLOPES.

EROSION CONTROL FENCE
(MACHINE SLICED)

NOT TO SCALE

REV.	BY	DATE	REVISION DESCRIPTION
-	-	-	-

JONES HAUGH SMITH
Engineers + Surveyors
415 West North Street Owatonna, MN 507-451-4598

DESIGNED: JHS5
DRAWN: JHS5
CHECKED: BJJ
Date: 5/14/26
DWG: 23–259

I hereby certify that this plan, specification, or report was prepared by me or under my direct supervision and that I am a duly Licensed Professional Engineer under the laws of the State of Minnesota.

John H. Schulte V
License No. 44639 Date: 5/14/26

HARVEST HILLS SECOND ADDITION
SCHROM CONSTRUCTION
OUTLOT A HARVEST HILLS
SWPPP DETAILS

SHEET 4 OF 24

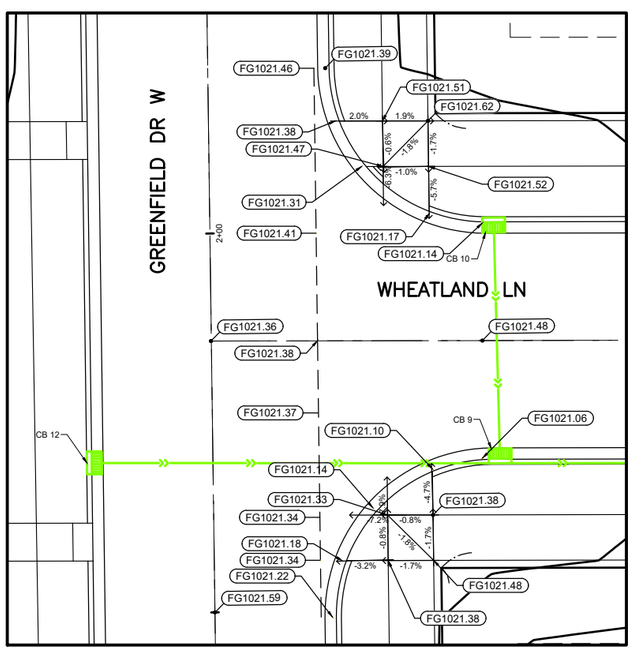

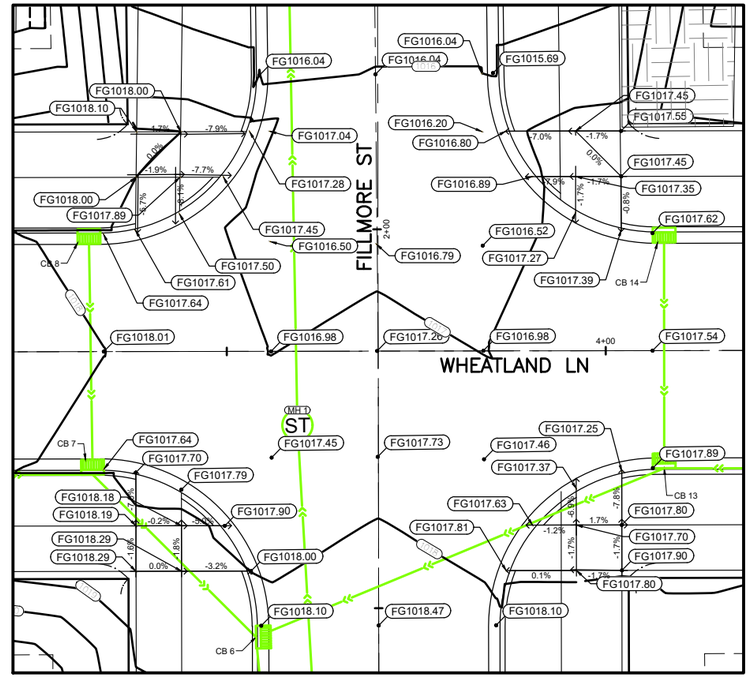

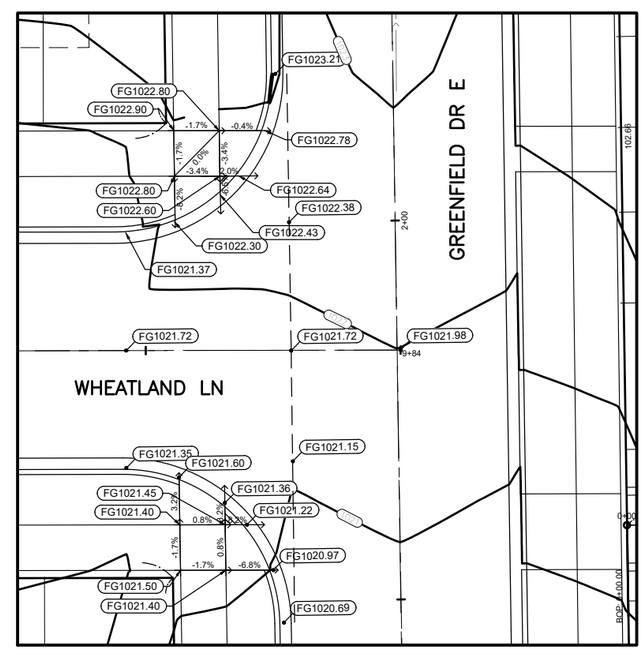

NOT TO SCALE

REV.	BY	DATE	REVISION DESCRIPTION
-	-	-	-

JONES HAUGH SMITH
Engineers + Surveyors
415 West North Street Owatonna, MN 507-451-4598

DESIGNED: JHS5
DRAWN: JHS5
CHECKED: BJV
Date: 5/14/26
DWG: 23-259

I hereby certify that this plan, specification, or report was prepared by me or under my direct supervision and that I am a duly Licensed Professional Engineer under the laws of the State of Minnesota.

John H. Schulte V
License No. 44639 Date: 5/14/26

HARVEST HILLS SECOND ADDITION

SCHROM CONSTRUCTION

OUTLOT A HARVEST HILLS

TYPICAL SECTION & DETAILS

SHEET 5 OF 24

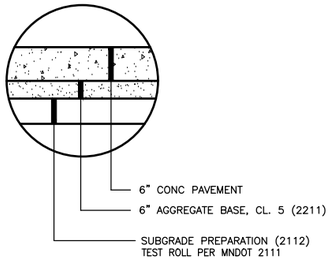

DRIVEWAY SECTION AT SIDEWALK

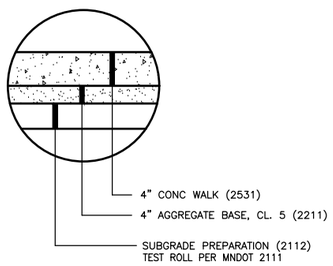

CONCRETE WALK SECTION

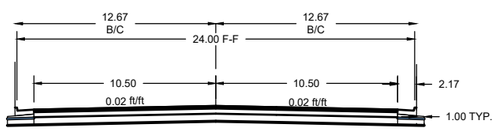

TYPICAL SECTION
PRIVATE ROAD

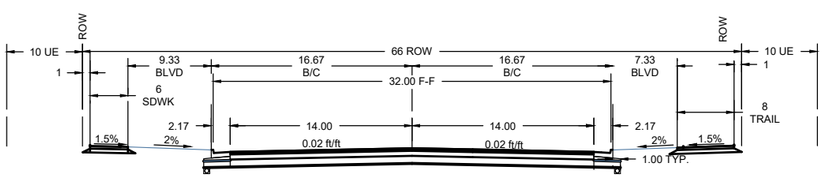

TYPICAL SECTION
66' ROW

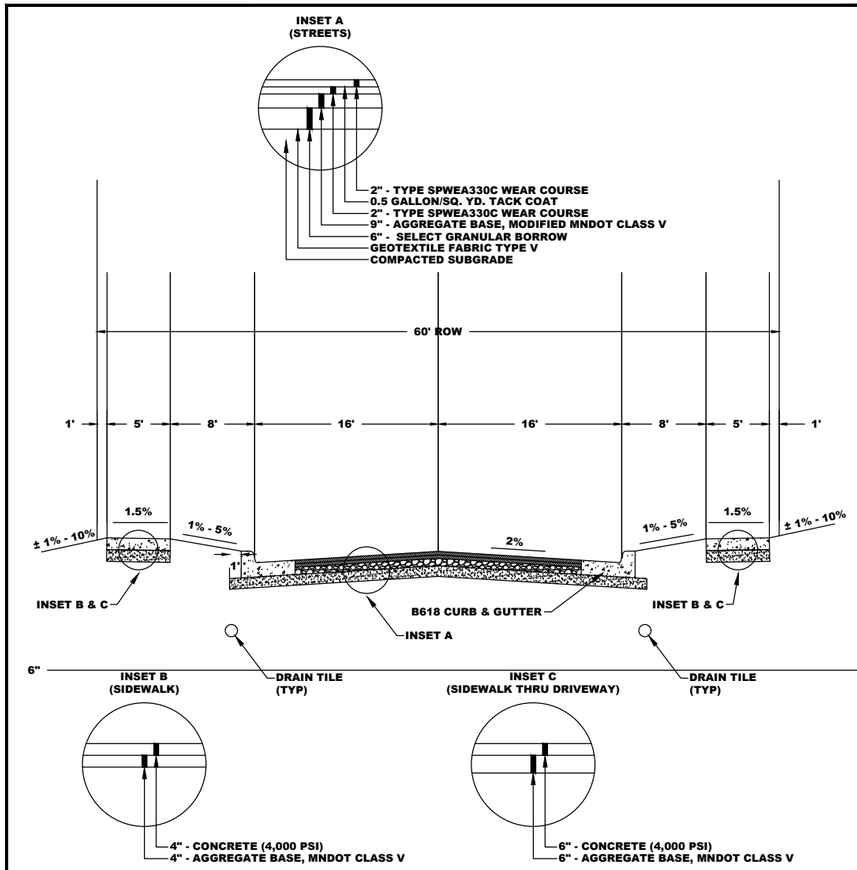

NOTES:
1. SIDEWALK MAY BE ELIMINATED ON ONE OR BOTH SIDES OF THE STREET IN SOME AREAS.
2. SUBGRADE MUST BE APPROVED BY THE CITY ENGINEER.
3. SEE PROJECT PLANS AND SPECIFICATIONS FOR STREET WIDTH AND STREET SECTION.
4. TYPICAL SECTION TO BE CONFIRMED WITH SITE SPECIFIC GEOTECHNICAL REPORT.

DRAWN BY: B.D.H. | NOT TO SCALE | UPDATED: 2025

ENGINEERING DIVISION

PLATE NO: STR-5

TYPICAL STREET SECTION

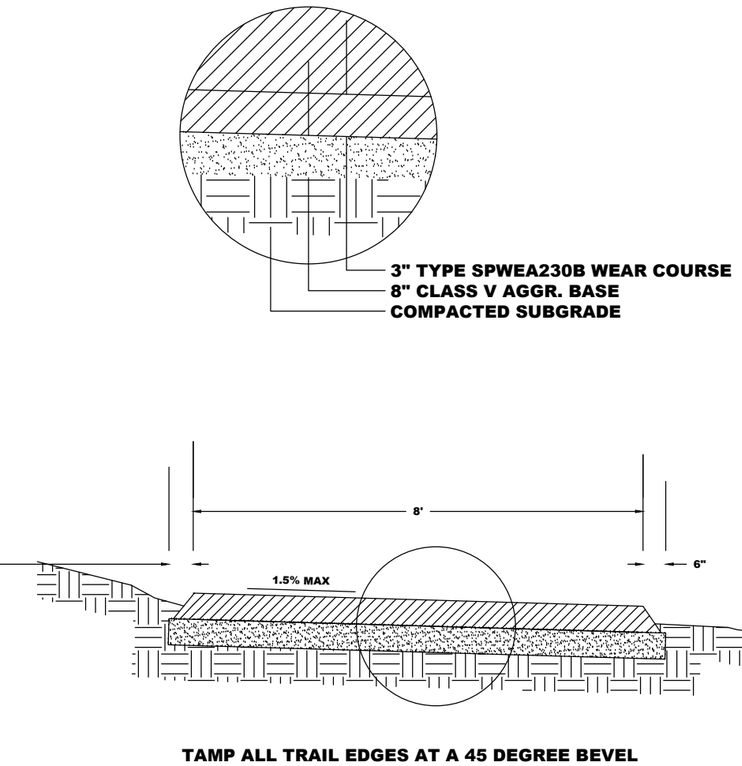

DRAWN BY: B.D.H. | NOT TO SCALE | UPDATED: 2026

ENGINEERING DIVISION

PLATE NO: STR-9

BITUMINOUS PATHWAY

NOTE: CITY STANDARD PLATES COPIED HERE FOR CONVENIENCE. PLATES SHOWN VALID AT TIME OF DESIGN. SEE CITY ENGINEER'S OFFICE FOR POSSIBLE REVISIONS.

NOT TO SCALE

REV.	BY	DATE	REVISION DESCRIPTION
-	-	-	-

JONES HAUGH SMITH
Engineers + Surveyors
415 West North Street Owatonna, MN 507-451-4598

DESIGNED: JHS5
DRAWN: JHS5
CHECKED: BJJ
Date: 5/14/26
DWG: 23-259

I hereby certify that this plan, specification, or report was prepared by me or under my direct supervision and that I am a duly Licensed Professional Engineer under the laws of the State of Minnesota.

John H. Schulte V
License No. 44639 Date: 5/14/26

HARVEST HILLS SECOND ADDITION
SCHROM CONSTRUCTION
OUTLOT A HARVEST HILLS
DETAILS

SHEET 6 OF 24

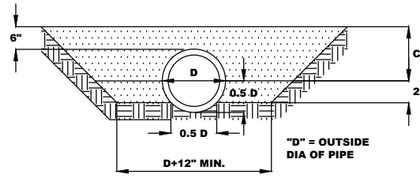

LOAD FACTOR 2.3

CLASS A

CONCRETE BACKFILL TO 0.5 OF OUTSIDE DIAMETER WITH SHAPED BEDDING

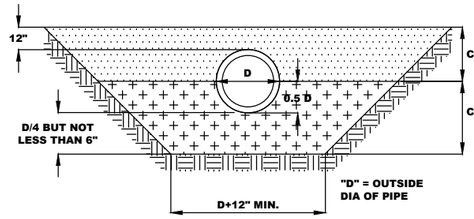

LOAD FACTOR 2.3

CLASS B

HAND SHAPED FROM ANGULAR BEDDING MATERIAL

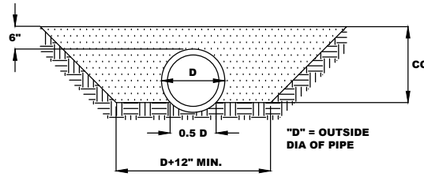

LOAD FACTOR 1.5

CLASS C - 1

HAND SHAPED FROM FIRM UNDISTURBED SOIL

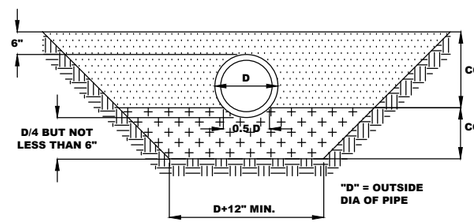

LOAD FACTOR 1.5

CLASS C - 2

HAND SHAPED FROM ANGULAR BEDDING MATERIAL

DRAWN BY: B.D.H. NOT TO SCALE UPDATED: 2025

ENGINEERING DIVISION

PLATE NO: BED-1

BEDDING METHODS FOR RCP OR DIP

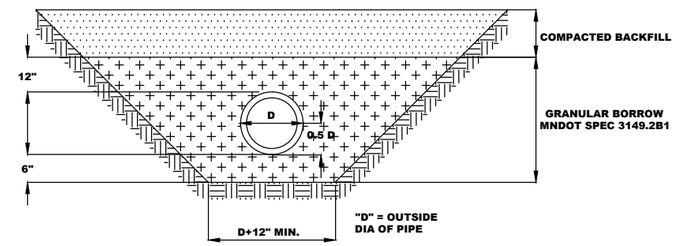

PIPE FOUNDATION & BEDDING IN GOOD SOILS

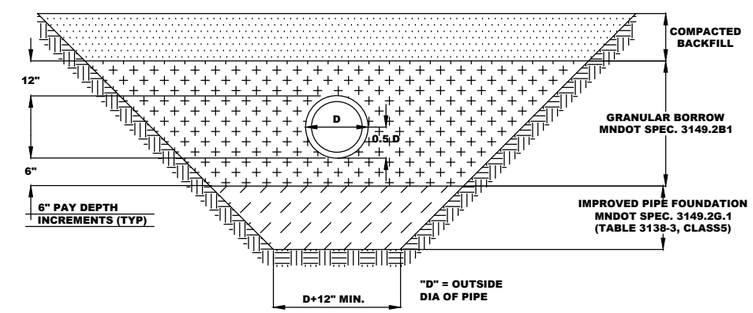

PIPE FOUNDATION & BEDDING IN POOR SOILS

DRAWN BY: B.D.H. NOT TO SCALE UPDATED: 2025

ENGINEERING DIVISION

PLATE NO: BED-2

BEDDING METHODS FOR PVC

NOTE: CITY STANDARD PLATES COPIED HERE FOR CONVENIENCE. PLATES SHOWN VALID AT TIME OF DESIGN. SEE CITY ENGINEER'S OFFICE FOR POSSIBLE REVISIONS.

NOT TO SCALE

REV.	BY	DATE	REVISION DESCRIPTION
-	-	-	-

JONES HAUGH SMITH
Engineers + Surveyors
415 West North Street Owatonna, MN 507-451-4598

DESIGNED: JHS5
DRAWN: JHS5
CHECKED: BJJ
Date: 5/14/26
DWG: 23-259

I hereby certify that this plan, specification, or report was prepared by me or under my direct supervision and that I am a duly Licensed Professional Engineer Under the laws of the State of Minnesota.

John H. Schulte V
License No. 44639 Date: 5/14/26

HARVEST HILLS SECOND ADDITION
SCHROM CONSTRUCTION
OUTLOT A HARVEST HILLS
DETAILS

SHEET 7 OF 24

NOTES:
1. MATERIALS USED SHALL CONFORM TO SANITARY AND STORM SEWER SECTION OF THESE SPECIFICATIONS.
2. REDUCER SECTION TO BE PRECAST ECCENTRIC TYPE WITH ON SIDE FACE RELATIVE TO MAINLINE THRU MANHOLE.
3. STANDARD CASTING SHALL BE IDENTIFIED AS EITHER "SANITARY SEWER" OR "STORM SEWER", BY IMPRINTING THOSE WORDS ON THE COVER IN LETTERS TWO (2) INCHES IN HEIGHT.

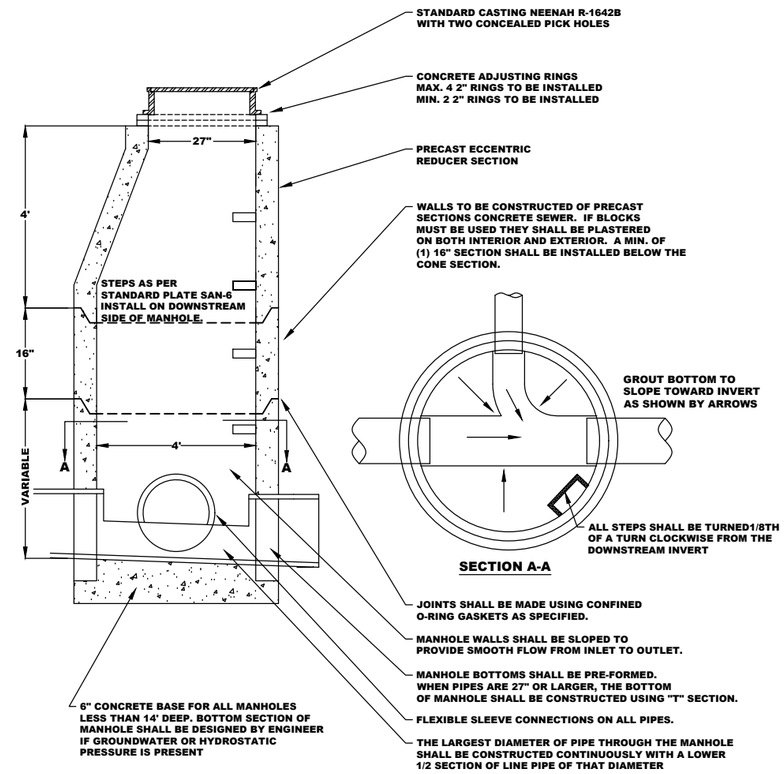

DRAWN BY: B.D.H. NOT TO SCALE UPDATED: 2025

ENGINEERING DIVISION

PLATE NO: SAN-1

STANDARD MANHOLE

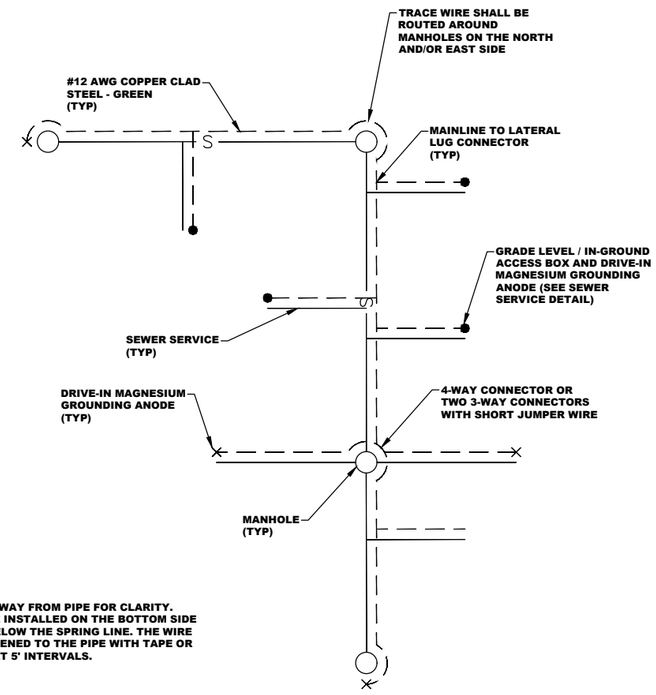

NOTES:
1. WIRE SHOWN AWAY FROM PIPE FOR CLARITY. WIRE SHALL BE INSTALLED ON THE BOTTOM SIDE OF THE PIPE BELOW THE SPRING LINE. THE WIRE SHALL BE FASTENED TO THE PIPE WITH TAPE OR PLASTIC TIES AT 5' INTERVALS.

TRACE WIRE PLAN (SEWER)

DRAWN BY: B.D.H. NOT TO SCALE UPDATED: 2025

ENGINEERING DIVISION

PLATE NO: SER-8

TRACE WIRE SAMPLE SEWER PLAN

NOTE: CITY STANDARD PLATES COPIED HERE FOR CONVENIENCE. PLATES SHOWN VALID AT TIME OF DESIGN. SEE CITY ENGINEER'S OFFICE FOR POSSIBLE REVISIONS.

NOT TO SCALE

REV.	BY	DATE	REVISION DESCRIPTION
-	-	-	-

JONES HAUGH SMITH
Engineers + Surveyors
415 West North Street Owatonna, MN 507-451-4598

DESIGNED: JHS5
DRAWN: JHS5
CHECKED: BJJ
Date: 5/14/26
DWG: 23-259

I hereby certify that this plan, specification, or report was prepared by me or under my direct supervision and that I am a duly Licensed Professional Engineer under the laws of the State of Minnesota.

John H. Schulte V
License No. 44639 Date: 5/14/26

HARVEST HILLS SECOND ADDITION
SCHROM CONSTRUCTION
OUTLOT A HARVEST HILLS
DETAILS

SHEET 8 OF 24

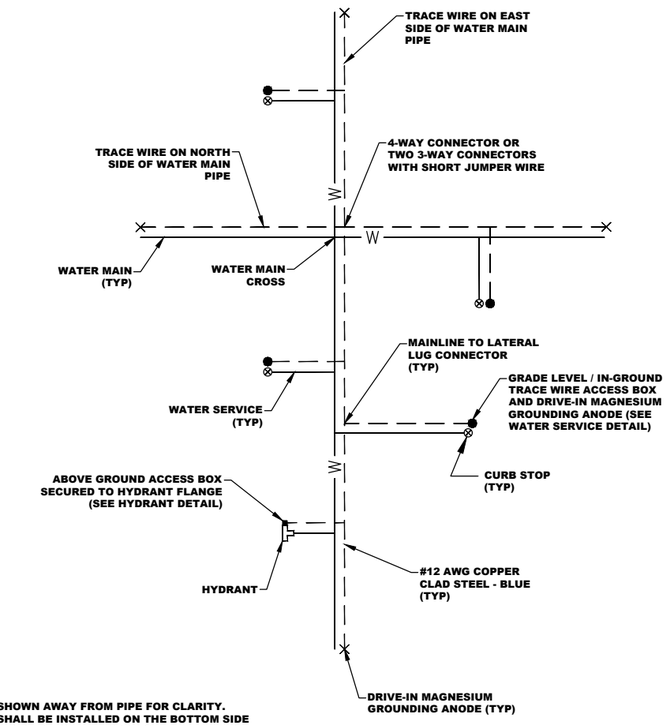

NOTES:
1. WIRE SHOWN AWAY FROM PIPE FOR CLARITY. WIRE SHALL BE INSTALLED ON THE BOTTOM SIDE OF THE PIPE BELOW THE SPRING LINE. THE WIRE SHALL BE FASTENED TO THE PIPE WITH TAPE OR PLASTIC TIES AT 5' INTERVALS.

TRACE WIRE PLAN (WATER)

DRAWN BY: B.D.H. NOT TO SCALE UPDATED: 2025

ENGINEERING DIVISION

PLATE NO: SER-9

TRACE WIRE SAMPLE WATER PLAN

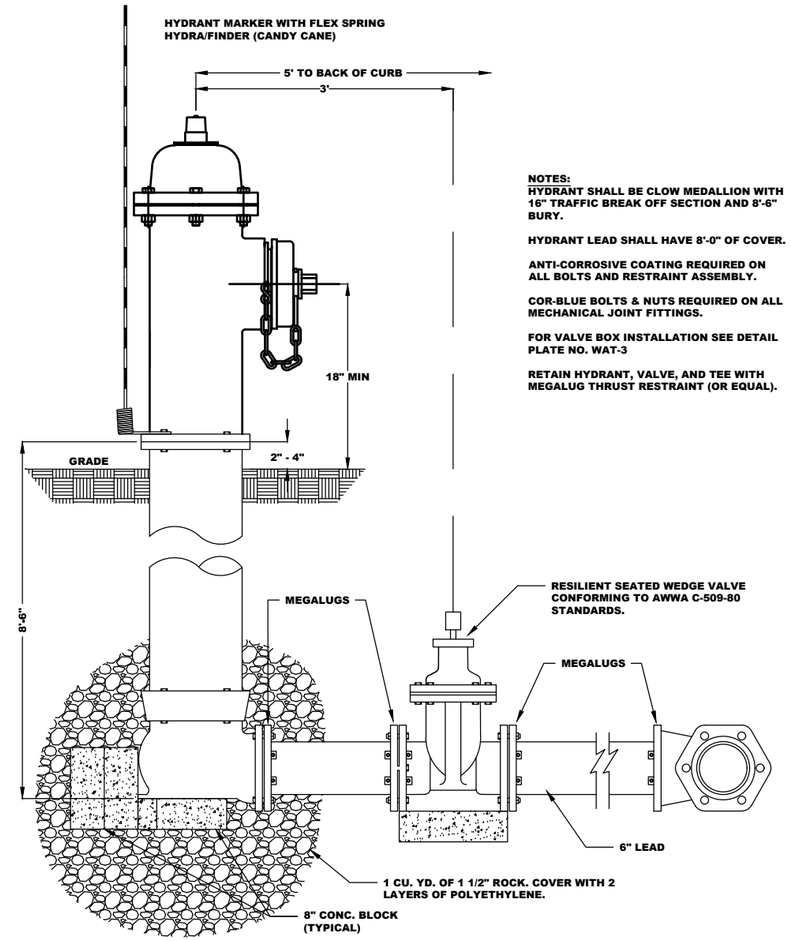

NOTES:
HYDRANT SHALL BE CLOW MEDALLION WITH 16" TRAFFIC BREAK OFF SECTION AND 8'-6" BURY.

HYDRANT LEAD SHALL HAVE 8'-0" OF COVER.

ANTI-CORROSIVE COATING REQUIRED ON ALL BOLTS AND RESTRAINT ASSEMBLY.

COR-BLUE BOLTS & NUTS REQUIRED ON ALL MECHANICAL JOINT FITTINGS.

FOR VALVE BOX INSTALLATION SEE DETAIL PLATE NO. WAT-3

RETAIN HYDRANT, VALVE, AND TEE WITH MEGALUG THRUST RESTRAINT (OR EQUAL).

DRAWN BY: B.D.H. NOT TO SCALE UPDATED: 2025

ENGINEERING DIVISION

PLATE NO: WAT-2

HYDRANT INSTALLATION

NOTE: CITY STANDARD PLATES COPIED HERE FOR CONVENIENCE. PLATES SHOWN VALID AT TIME OF DESIGN. SEE CITY ENGINEER'S OFFICE FOR POSSIBLE REVISIONS.

NOT TO SCALE

REV.	BY	DATE	REVISION DESCRIPTION
-	-	-	-

JONES HAUGH SMITH Engineers + Surveyors
415 West North Street Owatonna, MN 507-451-4598

DESIGNED: JHS5
DRAWN: JHS5
CHECKED: BJJ
Date: 5/14/26
DWG: 23-259

I hereby certify that this plan, specification, or report was prepared by me or under my direct supervision and that I am a duly Licensed Professional Engineer under the laws of the State of Minnesota.

John H. Schulte V
License No. 44639 Date: 5/14/26

HARVEST HILLS SECOND ADDITION
SCHROM CONSTRUCTION
OUTLOT A HARVEST HILLS
DETAILS

SHEET 9 OF 24

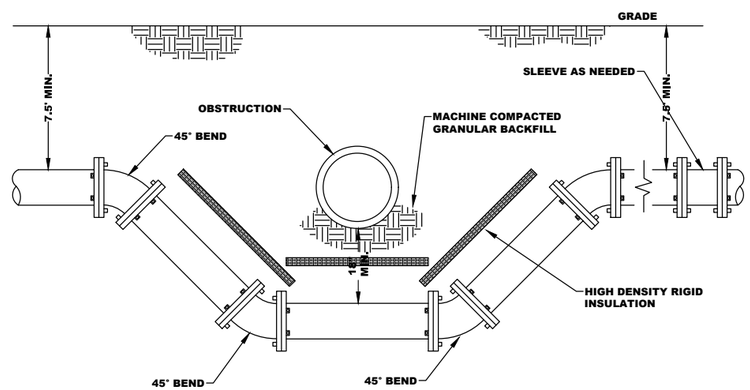

NOTES:
1. USE MEGALUG THRUST RESTRAINTS ON ALL FITTINGS
2. ON NEW CONSTRUCTION: RESTRAIN A MINIMUM OF TWO PIPE JOINTS (40LF) LEFT AND RIGHT OF THE OFFSET PIPING
3. SEE PLATE NO. WAT-1 TO DETERMINE THE REQUIRED CONCRETE THRUST BLOCKING
4. CORE-BLUE BOLTS & NUTS REQUIRED ON ALL MECHANICAL JOINT FITTINGS

DRAWN BY: B.D.H. NOT TO SCALE UPDATED: 2025

ENGINEERING DIVISION

PLATE NO: WAT-5

WATERMAIN OFFSET

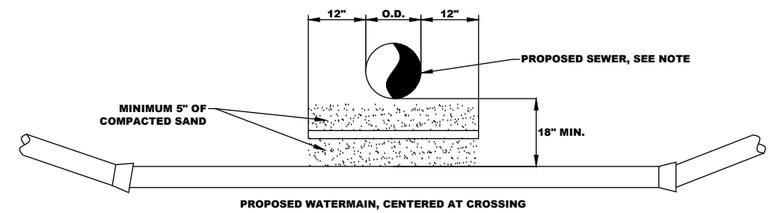

WATERMAIN UNDER SEWER

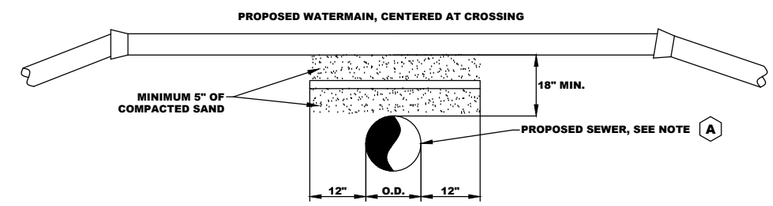

WATERMAIN OVER SEWER

A INSTALL ONE LENGTH OF WATERMAIN PIPE, WITH THE APPROPRIATE MATERIAL ADAPTORS, CENTERED AT CROSSING.

NOTE: WHEN WATERMAIN COVER IS LESS THAN 7.5', INSTALL PIPE UNDER SANITARY SEWER.

DRAWN BY: B.D.H. NOT TO SCALE UPDATED: 2025

ENGINEERING DIVISION

PLATE NO: WAT-6

WATERMAIN AND SEWER CROSSING

NOTE: CITY STANDARD PLATES COPIED HERE FOR CONVENIENCE. PLATES SHOWN VALID AT TIME OF DESIGN. SEE CITY ENGINEER'S OFFICE FOR POSSIBLE REVISIONS.

NOT TO SCALE

REV.	BY	DATE	REVISION DESCRIPTION
-	-	-	-

JONES HAUGH SMITH Engineers + Surveyors
415 West North Street Owatonna, MN 507-451-4598

DESIGNED: JHS5
DRAWN: JHS5
CHECKED: BJJ
Date: 5/14/26
DWG: 23-259

I hereby certify that this plan, specification, or report was prepared by me or under my direct supervision and that I am a duly Licensed Professional Engineer under the laws of the State of Minnesota.

John H. Schulte V
License No. 44639 Date: 5/14/26

HARVEST HILLS SECOND ADDITION
SCHROM CONSTRUCTION
OUTLOT A HARVEST HILLS
DETAILS

SHEET 10 OF 24

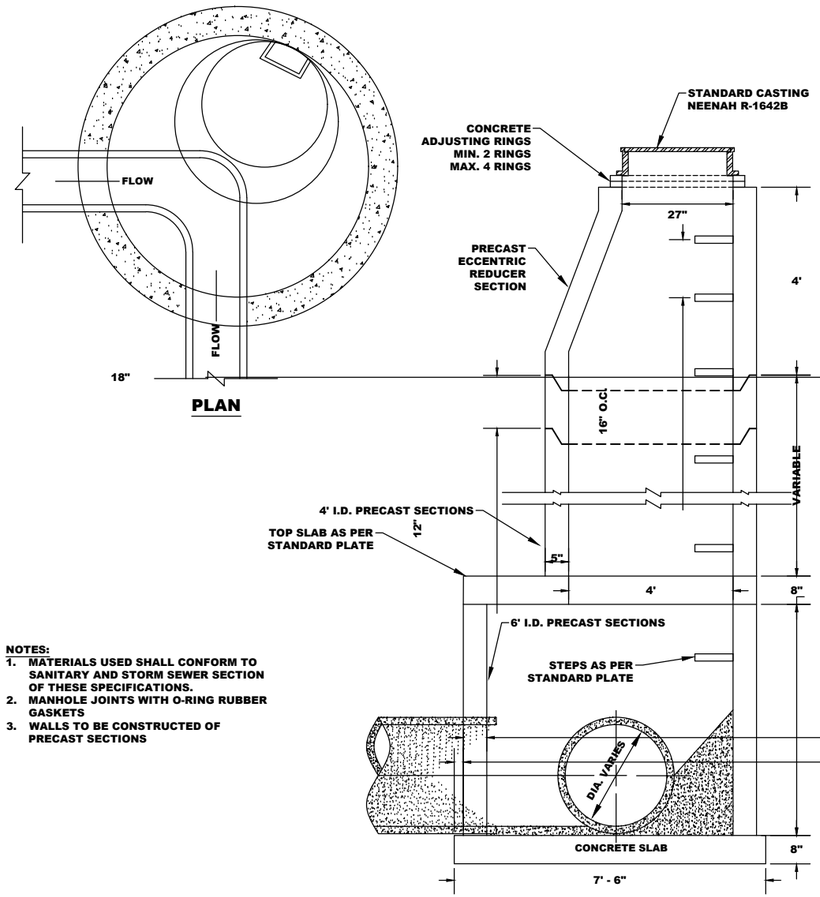

NOTES:
1. MATERIALS USED SHALL CONFORM TO SANITARY AND STORM SEWER SECTION OF THESE SPECIFICATIONS.
2. MANHOLE JOINTS WITH O-RING RUBBER GASKETS
3. WALLS TO BE CONSTRUCTED OF PRECAST SECTIONS

DRAWN BY: B.D.H. NOT TO SCALE UPDATED: 2025

ENGINEERING DIVISION

PLATE NO: STM-1

TOP SLAB MANHOLE 48" DIAMETER RISER SECTION

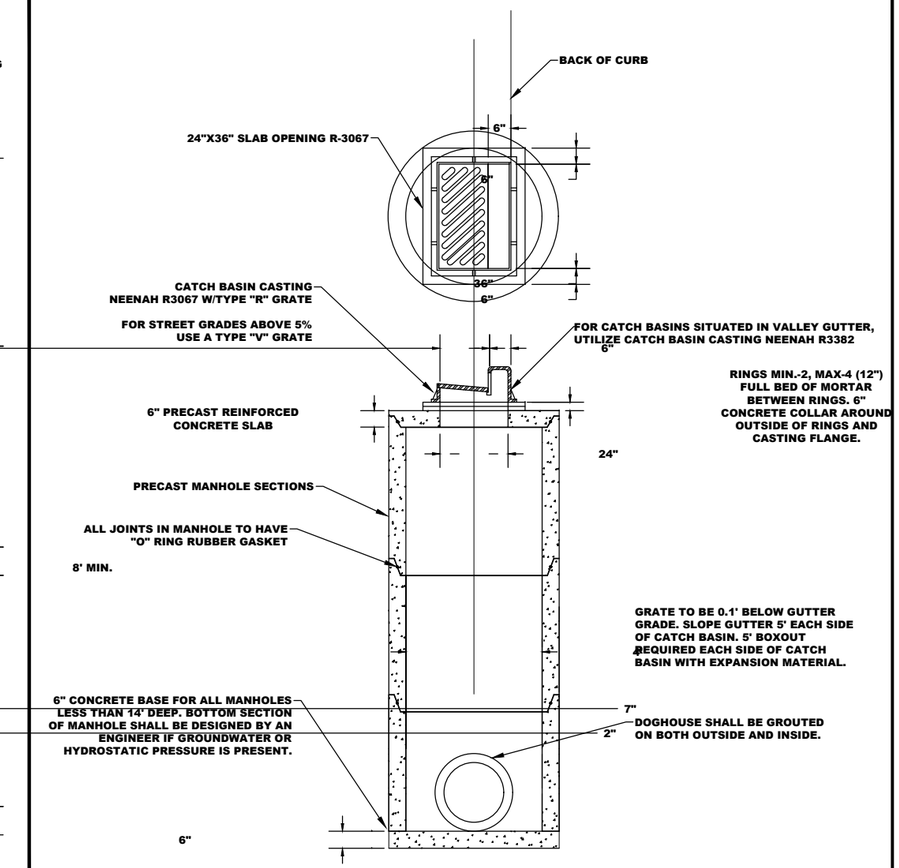

DRAWN BY: B.D.H. NOT TO SCALE UPDATED: 2025

ENGINEERING DIVISION

PLATE NO: STM-2

CATCH BASIN MANHOLE

NOTE: CITY STANDARD PLATES COPIED HERE FOR CONVENIENCE. PLATES SHOWN VALID AT TIME OF DESIGN. SEE CITY ENGINEER'S OFFICE FOR POSSIBLE REVISIONS.

NOT TO SCALE

REV.	BY	DATE	REVISION DESCRIPTION
-	-	-	-

JONES HAUGH SMITH
Engineers + Surveyors
415 West North Street Owatonna, MN 507-451-4598

DESIGNED: JHS5
DRAWN: JHS5
CHECKED: BJJ
Date: 5/14/26
DWG: 23-259

I hereby certify that this plan, specification, or report was prepared by me or under my direct supervision and that I am a duly Licensed Professional Engineer under the laws of the State of Minnesota.

John H. Schulte V
License No. 44639 Date: 5/14/26

HARVEST HILLS SECOND ADDITION
SCHROM CONSTRUCTION
OUTLOT A HARVEST HILLS
DETAILS

SHEET 11 OF 24

NOTES:
1. PROVIDE INVERTS FOR 4" PE TILE 30" BELOW T.C. WHERE NEEDED.
2. LOCATIONS TO BE VERIFIED DURING SHOP DRAWING REVIEW.

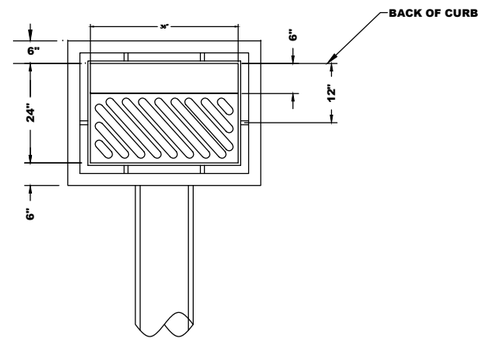

PLAN

CATCH BASIN CASTING: NEENAH R-3067 OR EQUAL, WITH TYPE "R" GRATE FOR STREET GRADES UP TO 5%. STREET GRADES 5% OR GREATER, USE A TYPE "V" GRATE.

GRATE TO BE 0.1' BELOW GUTTER GRADE. SLOPE GUTTER 5' EACH SIDE OF CATCH BASIN. 5' BOXOUT REQUIRED EACH SIDE OF CATCH BASIN WITH EXPANSION MATERIAL.

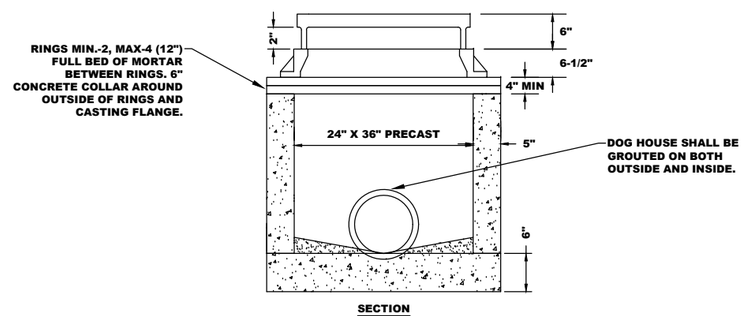

SECTION

DRAWN BY: B.D.H. NOT TO SCALE UPDATED: 2025

ENGINEERING DEPARTMENT

PLATE NO: STM-3

DRAINAGE STRUCTURE DESIGN SPECIAL

USE BEHIVE GRATE W/FRAME
NEENAH NO. R-4342 OR APPROVED EQUAL

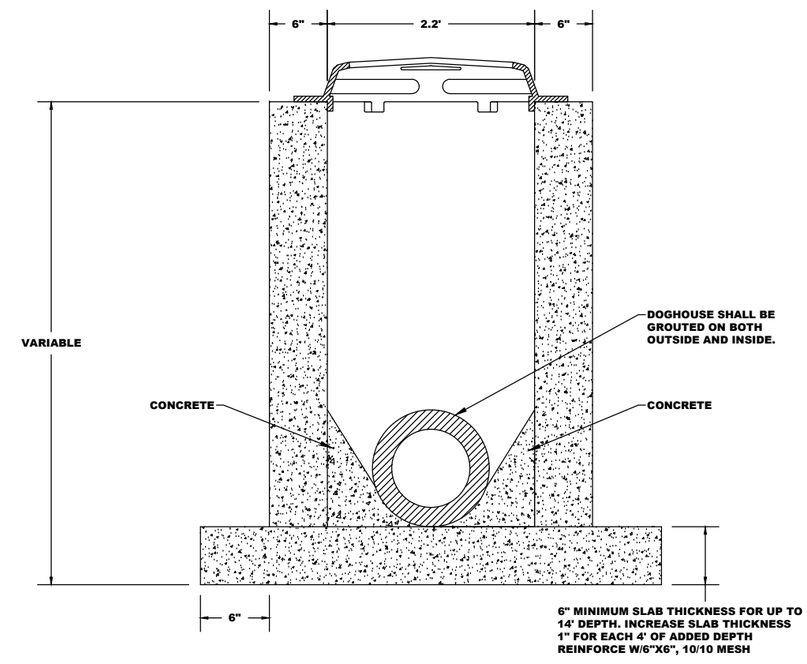

DRAWN BY: B.D.H. NOT TO SCALE UPDATED: 2025

ENGINEERING DIVISION

PLATE NO: STM-4

CATCH BASIN WITH BEEHIVE STYLE CASTING

NOTE: CITY STANDARD PLATES COPIED HERE FOR CONVENIENCE. PLATES SHOWN VALID AT TIME OF DESIGN. SEE CITY ENGINEER'S OFFICE FOR POSSIBLE REVISIONS.

NOT TO SCALE

REV.	BY	DATE	REVISION DESCRIPTION
-	-	-	-

JONES HAUGH SMITH
Engineers + Surveyors
415 West North Street Owatonna, MN 507-451-4598

DESIGNED: JHS5
DRAWN: JHS5
CHECKED: BJJ
Date: 5/14/26
DWG: 23-259

I hereby certify that this plan, specification, or report was prepared by me or under my direct supervision and that I am a duly Licensed Professional Engineer under the laws of the State of Minnesota.

John H. Schulte V
License No. 44639 Date: 5/14/26

HARVEST HILLS SECOND ADDITION
SCHROM CONSTRUCTION
OUTLOT A HARVEST HILLS
DETAILS

SHEET 12 OF 24

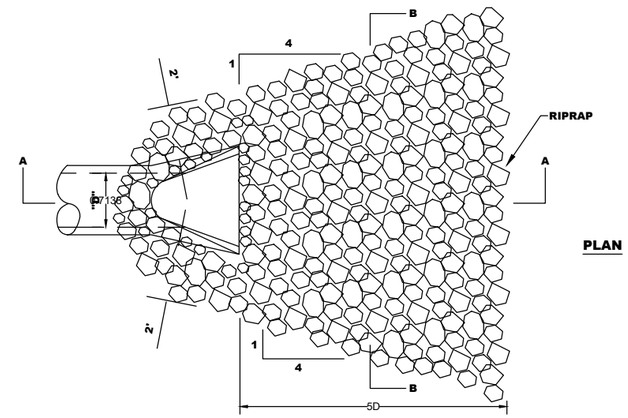

PLAN

RIP RAP AND FILTER BLANKET REQUIRMENTS

PIPE "D"	RIPRAP	FILTER BLANKET (MNDOT 3733)
12" TO 24"	8 TO 12 C.Y. CL.2	8 TO 12 S.Y., TYPE III
27" TO 33"	14 TO 20 C.Y. CL.3	14 TO 20 S.Y., TYPE IV
36" TO 48"	23 TO 38 C.Y. CL.3	23 TO 38 S.Y., TYPE IV
54" AND UP	62 C.Y. AND UP CL.4	40 S.Y. AND UP, TYPE IV

(ONE C.Y. = APPROX. 2,800 LBS.)

(1) FOR PIPE GREATER THAN OR EQUAL TO 30", USE 1.5'.

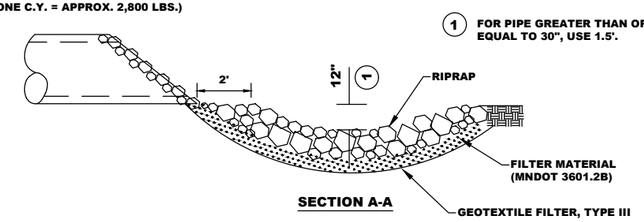

SECTION A-A

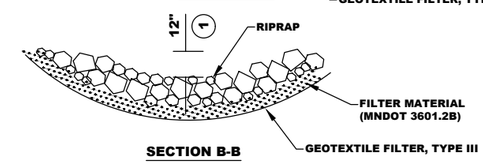

SECTION B-B

DRAWN BY: B.D.H. NOT TO SCALE UPDATED: 2025

ENGINEERING DIVISION

PLATE NO: STM-9

RIPRAP AT OUTLETS

NOTE: CITY STANDARD PLATES COPIED HERE FOR CONVENIENCE. PLATES SHOWN VALID AT TIME OF DESIGN. SEE CITY ENGINEER'S OFFICE FOR POSSIBLE REVISIONS.

NOT TO SCALE

REV.	BY	DATE	REVISION DESCRIPTION
-	-	-	-

JONES HAUGH SMITH
Engineers + Surveyors
415 West North Street Owatonna, MN 507-451-4598

DESIGNED: JHS5
DRAWN: JHS5
CHECKED: BJJ
Date: 5/14/26
DWG: 23-259

I hereby certify that this plan, specification, or report was prepared by me or under my direct supervision and that I am a duly Licensed Professional Engineer under the laws of the State of Minnesota.

John H. Schulte V
License No. 44639 Date: 5/14/26

HARVEST HILLS SECOND ADDITION
SCHROM CONSTRUCTION
OUTLOT A HARVEST HILLS
DETAILS

SHEET 13 OF 24

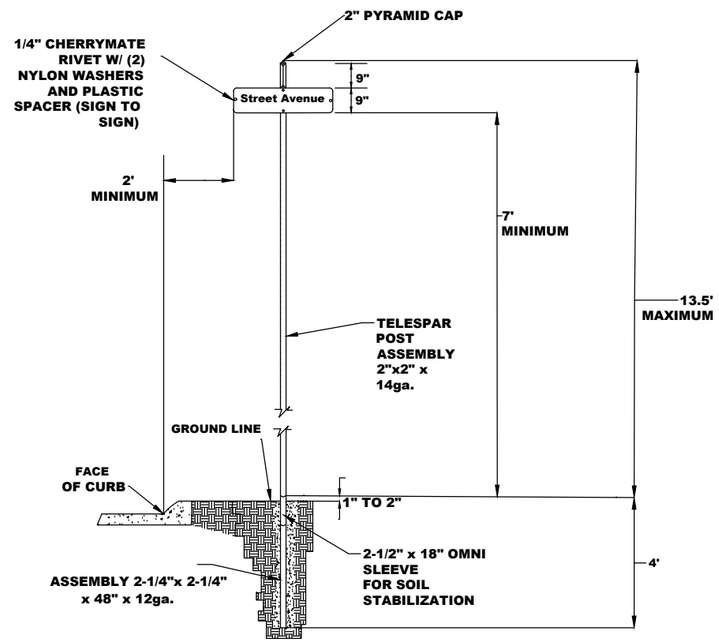

STREET SIGN SPECIFICATIONS

MATERIAL

-TELESPAR QUICK PUNCH 10' AND 12' POST
-48" x 2 1/4" x 2 1/4" x 12ga. ANCHOR ASSEMBLY
-2 1/2" x 2 1/2" x 18" x 12ga. OMNI SLEEVE AT ALL STREET BLADE INSTALLATIONS
-12' x 2" x 2" x 14ga. POST AT ALL STOP AND STREET BLADE INSTALLATIONS
-STREET BLADE: 2 7/16" HOLE PUNCHES ABOUT 1" FROM EDGE OF SIGN FOR TELESPAR POST AND CENTER ENDS FOR CHERRYMATE RIVET
-STREET BLADES ALUMINUM .080 9" HIGH WITH HIP GREEN FILM WITH WHITE TEXT, 6" LETTERS AND NUMBERS STARTING WITH CAPITAL LETTER AND THEN LOWER CASE
-ALL POSTS CAPPED WITH 2" PYRAMID AND TELESPAR HARDWARE TO BE USED
-TELESRAR POST ASSEMBLY SHOULD BE USED ONLY FOR STREET NAME SIGN POST INSTALLATION, OR SURFACE-MOUNT INSTALLATION (I.E CONCRETE MEDIAN) WITH APPLICABLE KLEEN BREAK ASSEMBLY. ALL SIGN INSTALLATIONS THAT DO NOT INCLUDE STREET NAME SIGNS SHALL BE INSTALLED ON FLAT-BLACK CHANNEL POSTS.
-ANY SIGN TYPE INSTALLED ON CONCRETE SURFACE = SQUARE TELESPAR POST INSTALLATION WITH KLEEN BREAK ASSEMBLY

DRAWN BY: B.D.H. NOT TO SCALE UPDATED: 2025

ENGINEERING DIVISION

PLATE NO: STR-11

STREET NAME SIGN POST DETAIL

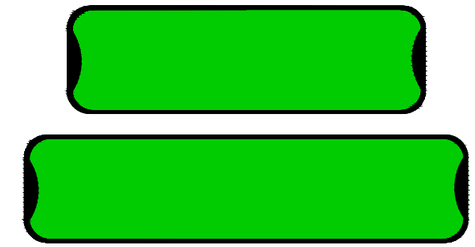

SERIES MAY BE MODIFIED TO B SERIES TO KEEP BLADES AT MAX 48"

SHIP TO: NORTHFIELD

Spec: 9XL, S/F, HIP, 080, WG, E450, E450, 6", UL

City: [redacted] Plate size: 9"

[X] SEND ART FOR APPROVAL

Reflective Sheeting	Type	Plate Length
[ ] Engineer Grade	[X] Single face	[X] Minimum Length 24 Inches
[X] Hi-Intensity	[ ] Double Face	[X] Maximum Length 48 Inches

Size	Punching	Logo
[ ] 6" Flat .080	[ ] None	[ ] Yes
[X] 9" Flat .080	[ ] E-Series	Right Side of Plate
[ ] 12" Flat	[X] Telespar (2-7/16" Holes, 2-5/16" holes, 1/2" FE)	Left Side of Plate
[ ] 9" Extruded	[ ] Other:	[X] No

Border	Letter Size		Letter Format
[ ] None	[ ] All 4"	[ ] 4" W/2" Superscript	[ ] Upper Case
[X] E-Series	[ ] All 6"	[ ] 5" W/2-1/2" Superscript	[X] Upper/Lower Case
[ ] 3/8" Border	[ ] 4" W/2" Suf/Pre	[X] 6" W/3" PS	
	[ ] 6" W/3" Suf/Pre	[ ] Other: (Specify Below)	
[ ] Arrows	[ ] 5" W/2-1/2" Suf/Pre		

Letter Series	Letter Color	Background Color	
[ ] B Series	[X] White	[ ] White	[ ] Brown
[X] C Series	[ ] Black	[X] Green	Other
[ ] Other	[ ] Other	[X] Blue (Private Streets)	

DRAWN BY B.D.H. NOT TO SCALE UPDATED: 2025

ENGINEERING DIVISION

PLATE NO: STR-16

STANDARD STREET SIGN

NOTE: CITY STANDARD PLATES COPIED HERE FOR CONVENIENCE. PLATES SHOWN VALID AT TIME OF DESIGN. SEE CITY ENGINEER'S OFFICE FOR POSSIBLE REVISIONS.

NOT TO SCALE

REV.	BY	DATE	REVISION DESCRIPTION
-	-	-	-

JONES HAUGH SMITH Engineers + Surveyors
415 West North Street Owatonna, MN 507-451-4598

DESIGNED: JHS5
DRAWN: JHS5
CHECKED: BJJ
Date: 5/14/26
DWG: 23-259

I hereby certify that this plan, specification, or report was prepared by me or under my direct supervision and that I am a duly Licensed Professional Engineer under the laws of the State of Minnesota.

John H. Schulte V
License No. 44639 Date: 5/14/26

HARVEST HILLS SECOND ADDITION
SCHROM CONSTRUCTION
OUTLOT A HARVEST HILLS
DETAILS

SHEET 14 OF 24

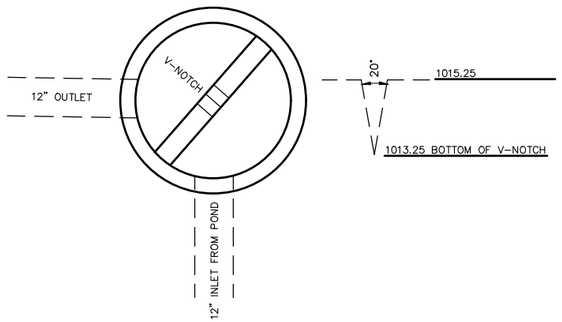

V–NOTCH WEIR OUTLET STRUCTURE PLAN

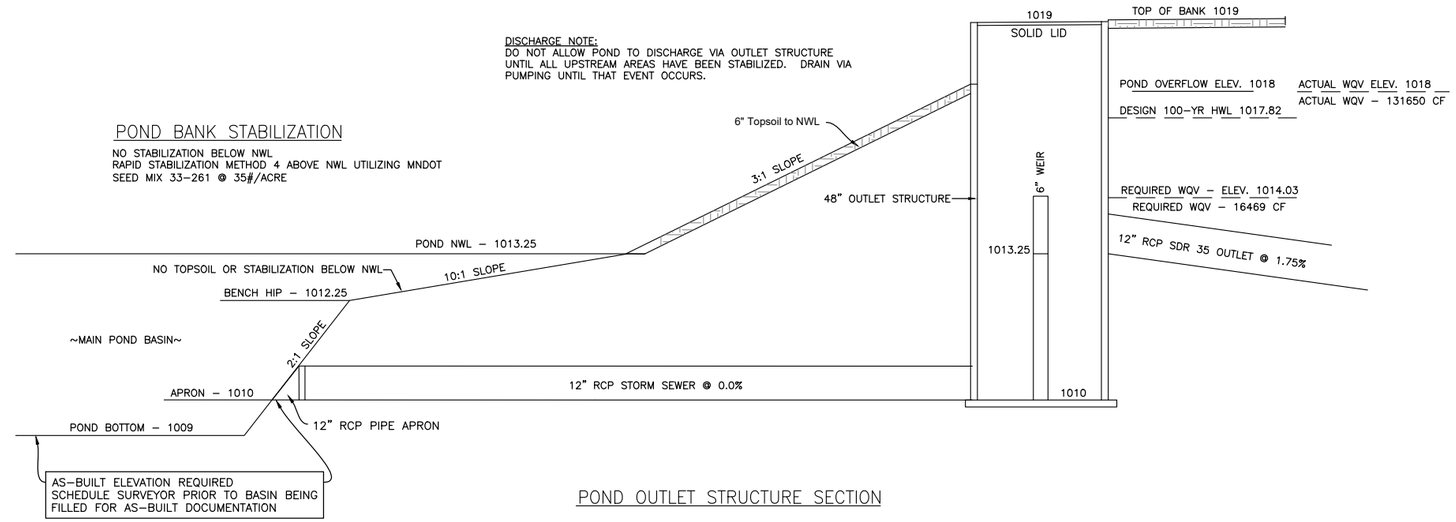

POND OUTLET STRUCTURE SECTION

New Sanitary Structure Table			
Structure Name	Structure Details	HEIGHT	SUMP/INV
MH A	RIM = 1021.32 SUMP = 1010.46 INV IN S= 1010.56 INV IN E= 1010.66 INV OUT N= 1010.46	10.86	1010.46
MH B	RIM = 1022.68 SUMP = 1011.58 INV IN S= 1011.68 INV OUT N= 1011.58	11.10	1011.58
MH C	RIM = 1022.72 SUMP = 1012.52 INV OUT W= 1012.52 INV OUT E= 1012.52	10.20	1012.52
MH D	RIM = 1017.26 SUMP = 1005.45 INV IN S= 1007.45 INV IN W= 1006.45 INV IN E= 1006.45 INV OUT N= 1005.45	11.81	1005.45
MH E	RIM = 1022.81 SUMP = 1012.89 INV IN S= 1013.09 INV OUT N= 1012.89	9.92	1012.89
MH F	RIM = 1020.35 SUMP = 1009.05 INV IN E= 1009.15 INV OUT W= 1009.05	11.30	1009.05
MH G	RIM = 1021.99 SUMP = 1003.61 INV IN S= 1003.71 INV OUT N= 1003.61 INV OUT W= 1010.79	18.38	1003.61
MH H	RIM = 1013.20 SUMP = 1004.25 INV IN S= 1004.35 INV OUT N= 1004.25	8.95	1004.25

PHASE 2 UTILITY CONSTRUCTION

W STS Structure Table				
Structure Name	Design	Structure Details	HEIGHT	SUMP/INV
CB 6	4022-48	RIM = 1018.50 SUMP = 1009.78 INV IN NW= 1013.78 INV IN E= 1013.78 INV OUT S= 1013.78	8.72	1009.78
CB 7	4022-48	RIM = 1018.18 SUMP = 1013.90 INV IN W= 1013.93 INV IN N= 1013.90 INV OUT SE= 1013.93	4.28	1013.90
CB 8	SD-1	RIM = 1018.19 SUMP = 1014.10 INV OUT S= 1014.10	4.09	1014.10
CB 9	4022-48	RIM = 1021.63 SUMP = 1014.90 INV IN W= 1015.33 INV IN N= 1014.90 INV OUT E= 1015.18	6.73	1014.90
CB 10	SD-1	RIM = 1021.62 SUMP = 1016.40 INV OUT S= 1016.40	5.22	1016.40
CB 12	SD-1	RIM = 1021.55 SUMP = 1017.57 INV OUT E= 1017.57	3.98	1017.57
CB 13	4022-48	RIM = 1017.64 SUMP = 1014.40 INV IN N= 1014.40 INV IN E= 1014.40 INV OUT W= 1014.40	3.24	1014.40
CB 14	SD-1	RIM = 1017.66 SUMP = 1014.60 INV OUT S= 1014.60	3.06	1014.60
CB 15	SD-1	RIM = 1019.69 SUMP = 1015.10 INV IN N= 1015.69 INV OUT W= 1015.69	4.59	1015.10
CB 16	SD-1	RIM = 1019.67 SUMP = 1015.30 INV OUT S= 1015.80	4.37	1015.30
FES 4	24" FES	RIM = 1015.46 SUMP = 1013.25 INV IN W= 1013.25	2.21	1013.25
MH 5	4020-48	RIM = 1021.40 SUMP = 1013.48 INV IN N= 1013.48 INV OUT E= 1013.48	7.92	1013.48

PHASE 2 UTILITY CONSTRUCTION

E STS Structure Table				
Structure Name	Design	Structure Details	HEIGHT	SUMP/INV
CB 18	SD-1	RIM = 1016.80 SUMP = 1009.30 INV IN E= 1013.40 INV OUT W= 1013.30	7.50	1009.30
CB 19	SD-1	RIM = 1016.79 SUMP = 1012.27 INV OUT W= 1013.60	4.52	1012.27
FES 17	15" FES	RIM = 1009.98 SUMP = ??? INV IN E= 1013.25	1014.01	???

PHASE 2 UTILITY CONSTRUCTION

POND OUTLET Structure Table				
Structure Name	Design	Structure Details	HEIGHT	SUMP/INV
EX MH	Unknown Dia	RIM = 1011.16 SUMP = 1003.80 INV IN S= 1003.80	7.36	1003.80
MH 1	4020-48	RIM = 1017.38 SUMP = 1006.49 INV IN S= 1006.49 INV OUT N= 1006.49	10.89	1006.49
MH 3	4020-48	RIM = 1020.69 SUMP = 1009.12 INV IN E= 1009.12 INV OUT N= 1009.12	11.57	1009.12
OS	SPECIAL - 60"	RIM = 1019.00 SUMP = 1013.25 INV OUT W= 1013.25	5.75	1013.25

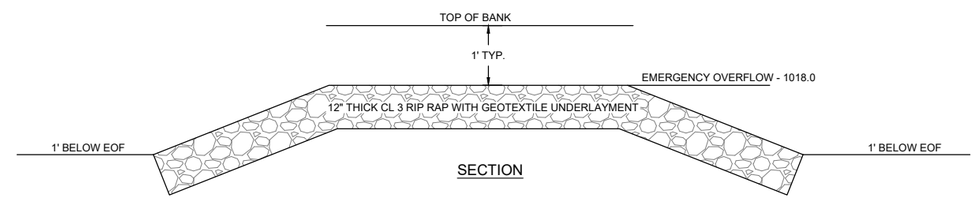

SECTION

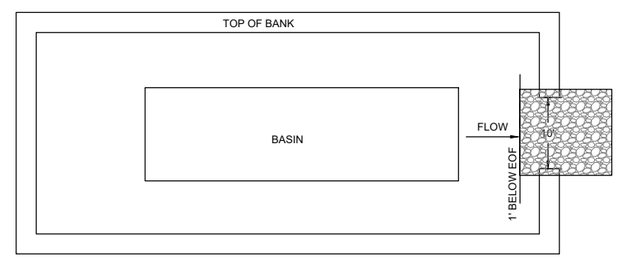

PLAN

RIP RAP EMERGENCY OVERFLOW

NOT TO SCALE

REV.	BY	DATE	REVISION DESCRIPTION
1	JHS5	4/14/26	ADD POND OUTLET STRUCTURE TABLE

JONES HAUGH SMITH Engineers + Surveyors
415 West North Street Owatonna, MN 507-451-4598

DESIGNED: JHS5
DRAWN: JHS5
CHECKED: BJJ
Date: 5/14/26
DWG: 23-259

I hereby certify that this plan, specification, or report was prepared by me or under my direct supervision and that I am a duly Licensed Professional Engineer under the laws of the State of Minnesota.
John H. Schulte V
License No. 44639 Date: 5/14/26

HARVEST HILLS SECOND ADDITION
SCHROM CONSTRUCTION
OUTLOT A HARVEST HILLS
DETAILS

SHEET 15 OF 24

EARTHWORK NOTES:

1. CONTRACTOR TO FURNISH ON SITE GEOTECHNICAL CONSULTING ENGINEER AS REQUIRED.
2. SOIL CORRECTIONS UNDER THE PROPOSED CONCRETE & ASPHALTIC PAVEMENT SHALL INCLUDE, BUT NOT BE LIMITED TO, REMOVAL OF ALL TOPSOIL AND VISIBLY ORGANIC FILL MATERIAL.
3. CONTRACTOR TO FURNISH ON SITE GEOTECHNICAL CONSULTING ENGINEER TO COORDINATE SOIL CORRECTIONS UNDER PAVEMENTS.
4. THE SITE SHALL BE GRADED TO THE CONTOURS SHOWN AND TO PROVIDE THE DRAINAGE PATTERN SHOWN.
5. GRADE ALL AREAS TO DRAIN.
6. THE ENGINEER MAY ORDER ADJUSTMENTS TO THE GRADES SHOWN ON THE PLAN TO ENSURE PROPER OR BETTER DRAINAGE OR UTILITY COVERAGE AS WORK INCIDENTAL TO THE CONTRACT.

TURF ESTABLISHMENT

1. PROVIDE A MINIMUM OF 6" OF TOPSOIL OVER ALL AREAS DESIGNATED TO RECEIVE TURF.
2. STABILIZE ALL OTHER DISTURBED AREAS OF THE SITE NOT SHOWN TO RECEIVE SPECIAL TREATMENT ON THIS PLAN IN ACCORDANCE WITH THE LANDSCAPE PLAN OF IF NOT SHOWN, WITH HYDROSEED MIXTURE AS MNDOT RAPID STABILIZATION METHOD 3 WITH:
   SEED MIX 25-131 @ 100 LB/ACRE,
   FERTILIZER 22-5-10 @ 300 LBS/ACRE
   TYPE 1 HYDRAULIC SOIL STABILIZER

WINTER STABILIZATION

IN THE EVENT THAT FINAL STABILIZATION OF THE SITE HAS NOT OCCURRED PRIOR TO WINTER CONDITIONS, THE FOLLOWING ACTIVITIES WILL OCCUR:
1. STABILIZE ALL AREAS DESIGNATED TO RECEIVE TURF WITH SODDING OR SEED MIX 22-112 @ 40 LB/ACRE WITH SEED MIX 21-112 (WINTER WHEAT) @ 100 LB/ACRE, AND TYPE 1 MULCH FROZEN TO GROUND WITH WATER
2. SPOT CHECK AND STABILIZE ALL AREAS ALREADY STABILIZED WITH THE ABOVE

KEYNOTES

1. CONTOURS SHOWN INCLUDE A 1' HOLD-DOWN FOR STRUCTURE PADS

LEGEND

—848— EXISTING ELEVATION CONTOUR LINE

—848— PROPOSED ELEVATION CONTOUR LINE

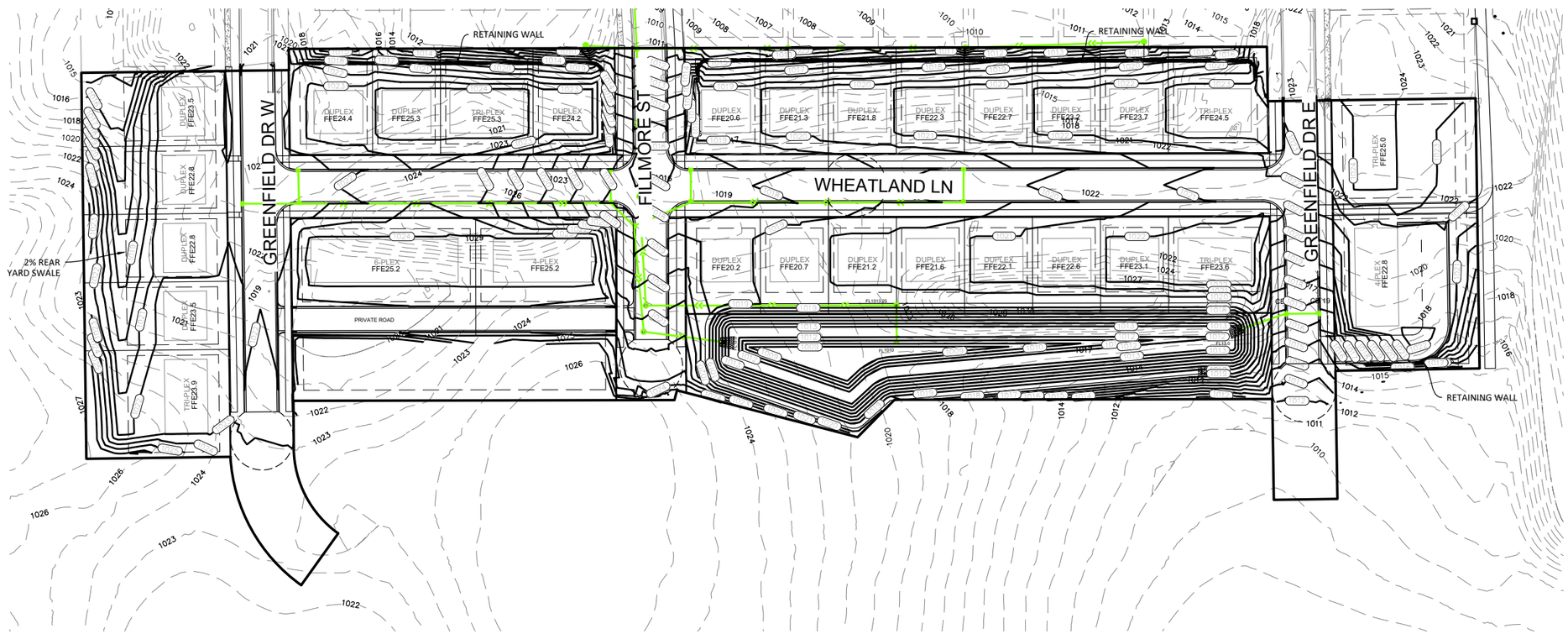

60 0 60
HORIZ. SCALE FEET
DRAWINGS ON 11x17 SHEETS ARE HALF SCALE

BENCHMARK:
TNFH SOUTH END OF EXISTING GREENFIELD DR W
ELEVATION 1024.62

REV.	BY	DATE	REVISION DESCRIPTION
-	-	-	-

JONES HAUGH SMITH
Engineers + Surveyors
415 West North Street Owatonna, MN 507-451-4598

DESIGNED: JHS5
DRAWN: JHS5
CHECKED: BJJ
Date: 5/14/26
DWG: 23-259

I hereby certify that this plan, specification, or report was prepared by me or under my direct supervision and that I am a duly Licensed Professional Engineer under the laws of the State of Minnesota.
John H. Schulte V
License No. 44639 Date: 5/14/26

HARVEST HILLS SECOND ADDITION
SCHROM CONSTRUCTION
OUTLOT A HARVEST HILLS
OVERALL GRADING PLAN

SHEET 16 OF 24

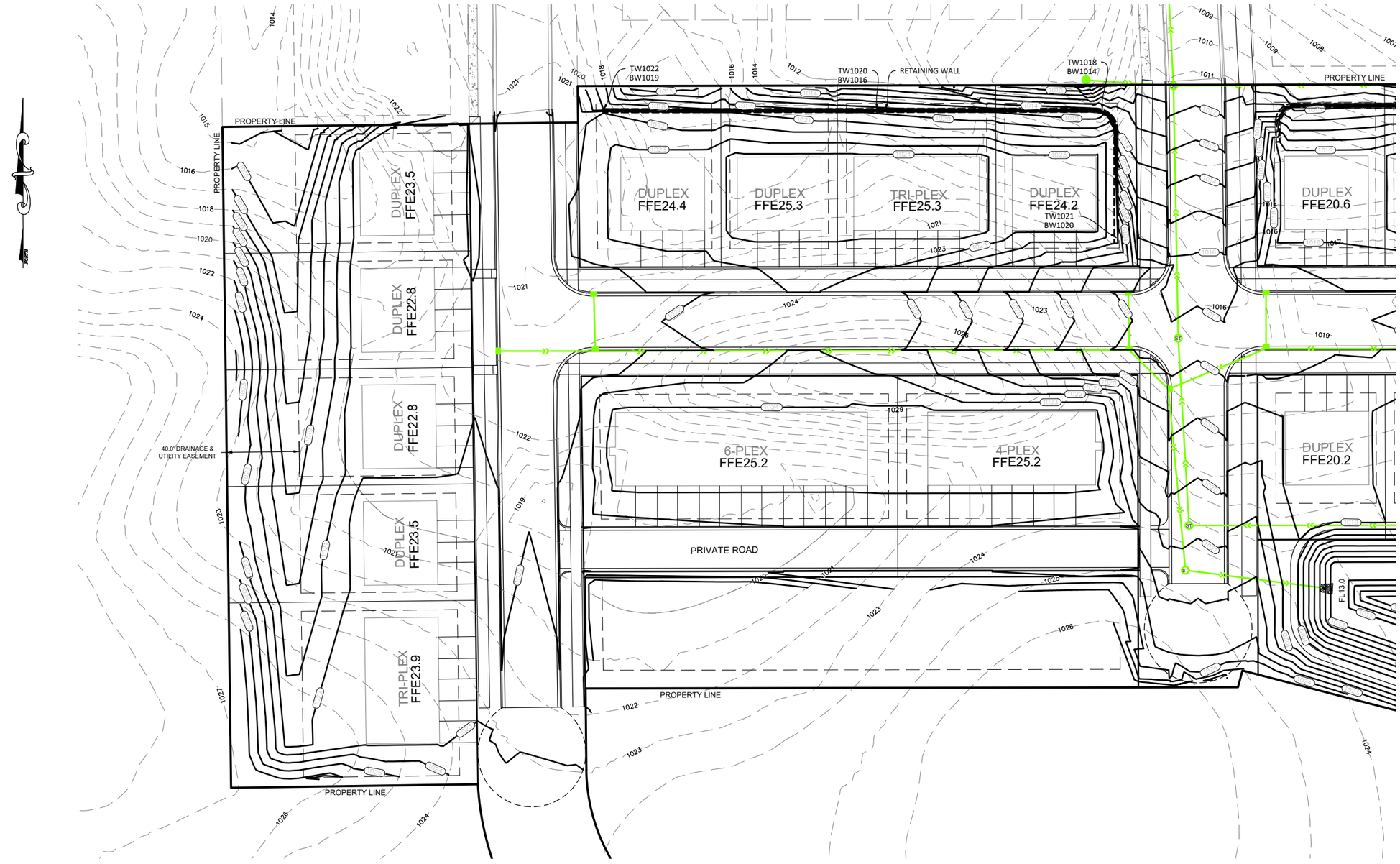

LEGEND

—848— EXISTING ELEVATION CONTOUR LINE

—848— PROPOSED ELEVATION CONTOUR LINE

30 0 30
HORIZ. SCALE FEET
DRAWINGS ON 11x17 SHEETS ARE HALF SCALE

BENCHMARK:

TNFH SOUTH END OF EXISTING GREENFIELD DR W
ELEVATION 1024.62

REV.	BY	DATE	REVISION DESCRIPTION
-	-	-	-

JONES HAUGH SMITH
Engineers + Surveyors
415 West North Street Owatonna, MN 507-451-4598

DESIGNED: JHS5
DRAWN: JHS5
CHECKED: BJJ
Date: 5/14/26
DWG: 23-259

I hereby certify that this plan, specification, or report was prepared by me or under my direct supervision and that I am a duly Licensed Professional Engineer under the laws of the State of Minnesota.

John H. Schulte V
License No. 44639 Date: 5/14/26

HARVEST HILLS SECOND ADDITION
SCHROM CONSTRUCTION
OUTLOT A HARVEST HILLS
DETAIL GRADING PLAN

SHEET 17 OF 24

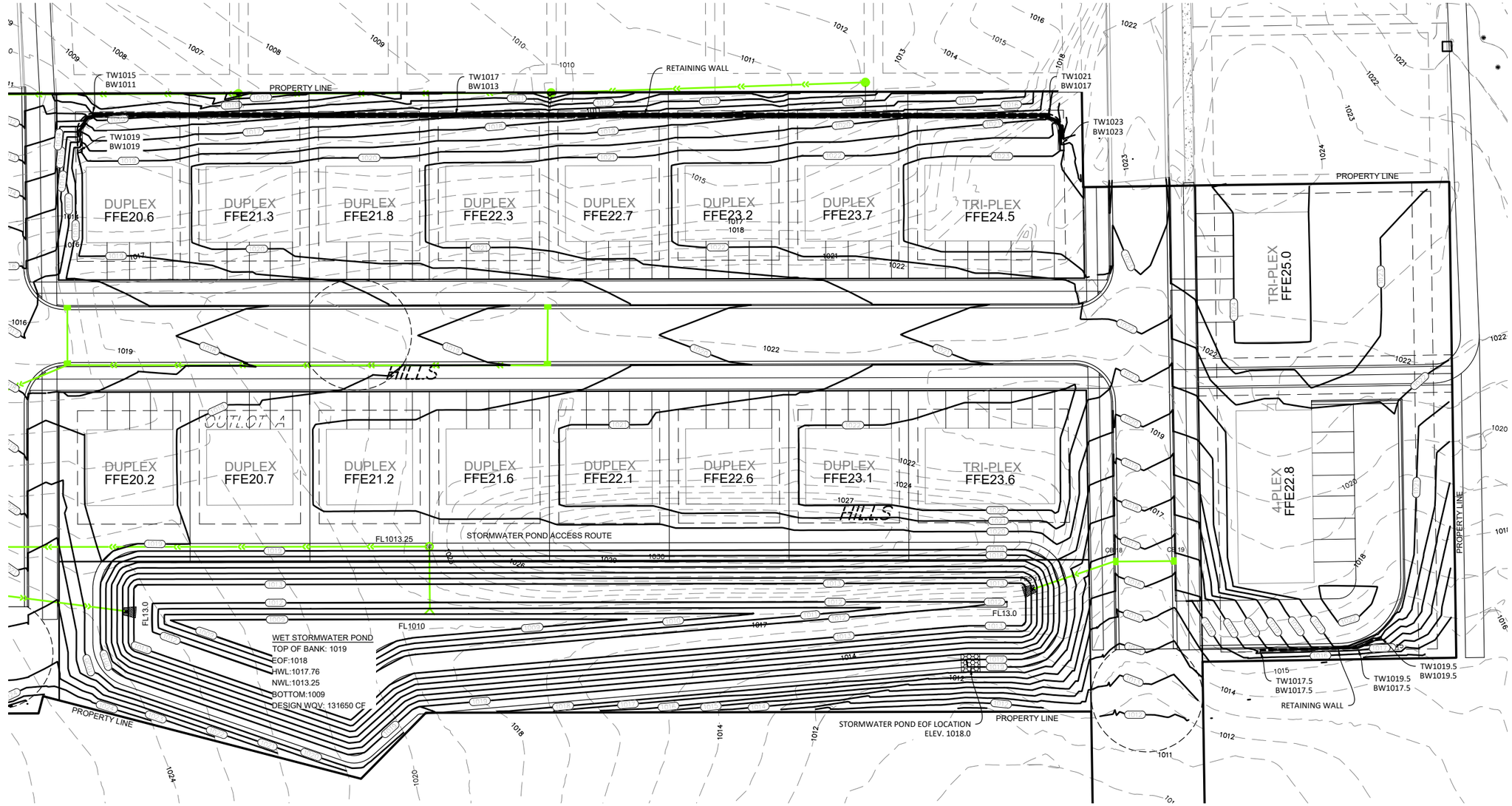

LEGEND

—848— EXISTING ELEVATION CONTOUR LINE

—848— PROPOSED ELEVATION CONTOUR LINE

30 0 30
HORIZ. SCALE FEET
DRAWINGS ON 11x17 SHEETS ARE HALF SCALE

BENCHMARK:
TNFH SOUTH END OF EXISTING GREENFIELD DR W
ELEVATION 1024.62

REV.	BY	DATE	REVISION DESCRIPTION
-	-	-	-

JONES HAUGH SMITH
Engineers + Surveyors
415 West North Street Owatonna, MN 507-451-4598

DESIGNED: JHS5
DRAWN: JHS5
CHECKED: BJJ
Date: 5/14/26
DWG: 23-259

I hereby certify that this plan, specification, or report was prepared by me or under my direct supervision and that I am a duly Licensed Professional Engineer under the laws of the State of Minnesota.

John H. Schulte V
License No. 44639 Date: 5/14/26

HARVEST HILLS SECOND ADDITION
SCHROM CONSTRUCTION
OUTLOT A HARVEST HILLS
DETAIL GRADING PLAN

SHEET 18 OF 24

GREENFIELD DR WEST

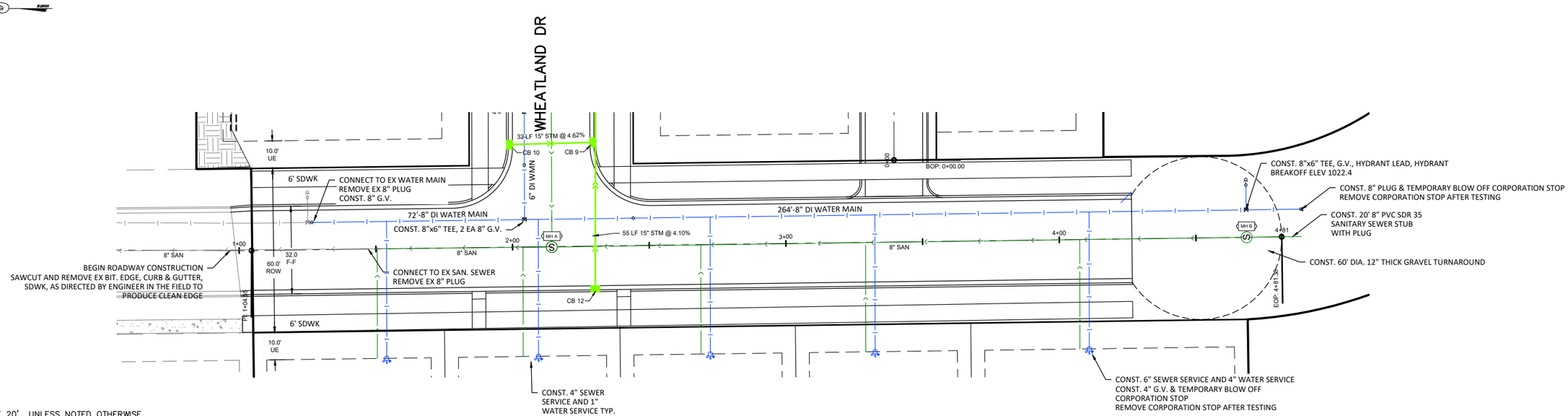

NOTES:
1: ALL INTERSECTION RADII ARE 20' UNLESS NOTED OTHERWISE.
2: ALL CURB RADII ARE DIMENSIONED TO BACK OF CURB. ALL STREET DIMENSIONS ARE TO FACE OF CURB.
3: ALL BITUMINOUS MATCH POINTS TO EXISTING INPLACE BITUMINOUS SHALL BE CLEANLY SAW CUT FULL DEPTH.
4: CONTRACTOR SHALL COORDINATE WITH UTILITY OWNER TO RELOCATE PRIVATE UTILITIES AS NECESSARY TO CONSTRUCT STREETS AND UTILITIES.
5: WATER & SEWER SERVICE LATERALS S SHALL BE INSTALLED PERPENDICULAR TO THE MAIN AND CENTERED ON THE LOT OR AS DIRECTED BY ENGINEER.

PROPOSED CONSTRUCTION

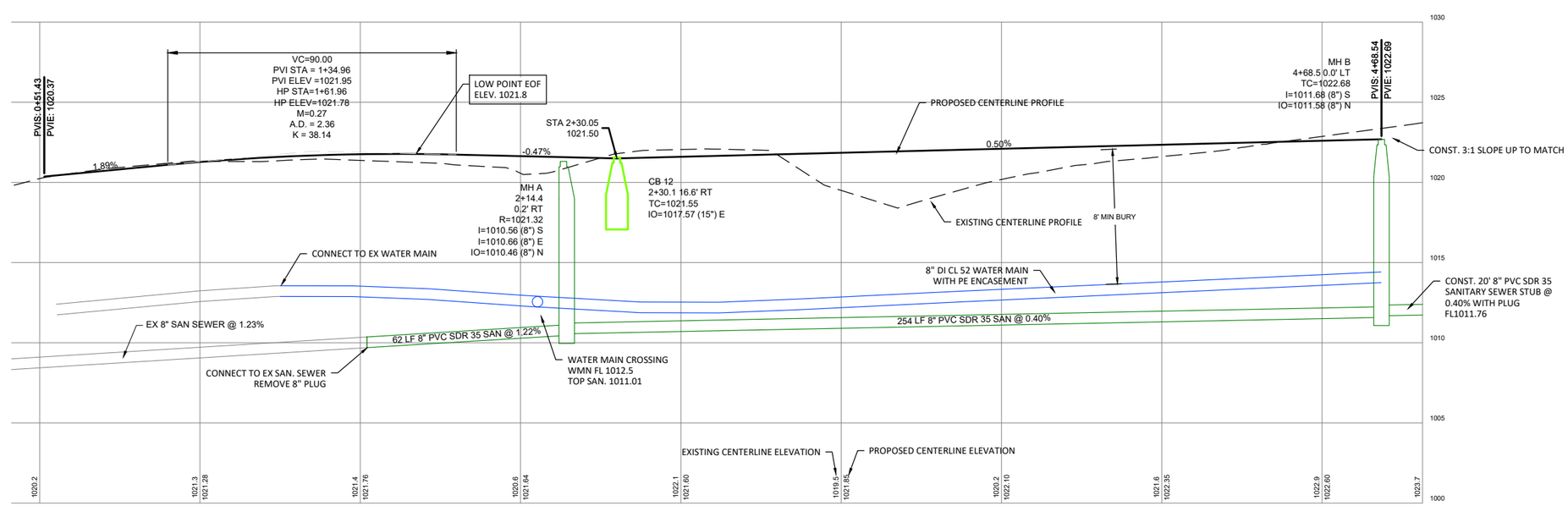

20 0 20 HORIZ. SCALE FEET

4 0 4 VERT. SCALE FEET

BENCHMARK:

TNFH SOUTH END OF EXISTING GREENFIELD DR W
ELEVATION 1024.62

REV.	BY	DATE	REVISION DESCRIPTION
-	-	-	-

JONES HAUGH SMITH
Engineers + Surveyors
415 West North Street Owatonna, MN 507-451-4598

DESIGNED: JHS5
DRAWN: JHS5
CHECKED: SAT
DATE: 5/14/26
FILE NO: 23-259

I hereby certify that this plan, specification, or report was prepared by me or under my direct supervision and that I am a duly Licensed Professional ~~Engineer under the laws~~ of the State of Minnesota.

John H. Schulte V
License No. 44639 Date: 5/14/26

HARVEST HILLS SECOND ADDITION
SCHROM CONSTRUCTION
2026 CONSTRUCTION
GREENFIELD DR W PLAN AND PROFILE

SHEET 19 OF 24

FILLMORE STREET

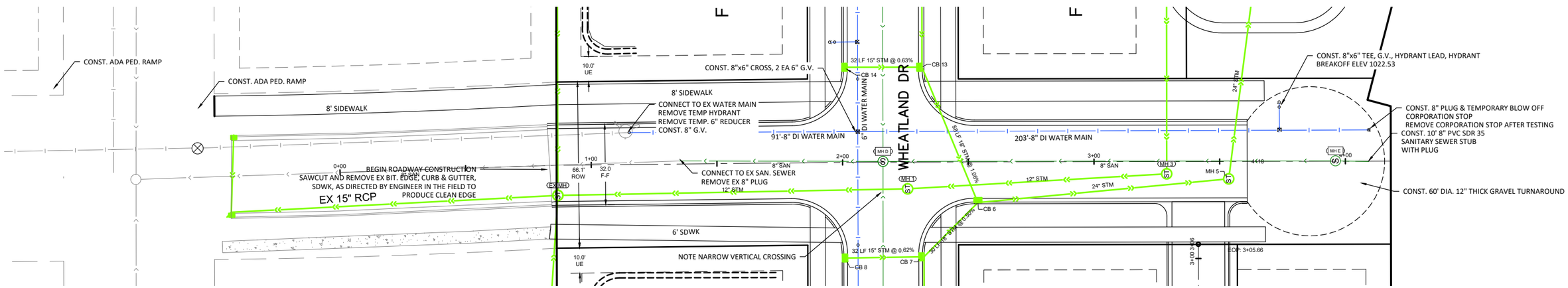

NOTES:
1: ALL INTERSECTION RADII ARE 20' UNLESS NOTED OTHERWISE.
2: ALL CURB RADII ARE DIMENSIONED TO BACK OF CURB. ALL STREET DIMENSIONS ARE TO FACE OF CURB.
3: ALL BITUMINOUS MATCH POINTS TO EXISTING INPLACE BITUMINOUS SHALL BE CLEANLY SAW CUT FULL DEPTH.
4: CONTRACTOR SHALL COORDINATE WITH UTILITY OWNER TO RELOCATE PRIVATE UTILITIES AS NECESSARY TO CONSTRUCT STREETS AND UTILITIES.
5: WATER & SEWER SERVICE LATERALS S SHALL BE INSTALLED PERPENDICULAR TO THE MAIN AND CENTERED ON THE LOT OR AS DIRECTED BY ENGINEER.

PROPOSED CONSTRUCTION

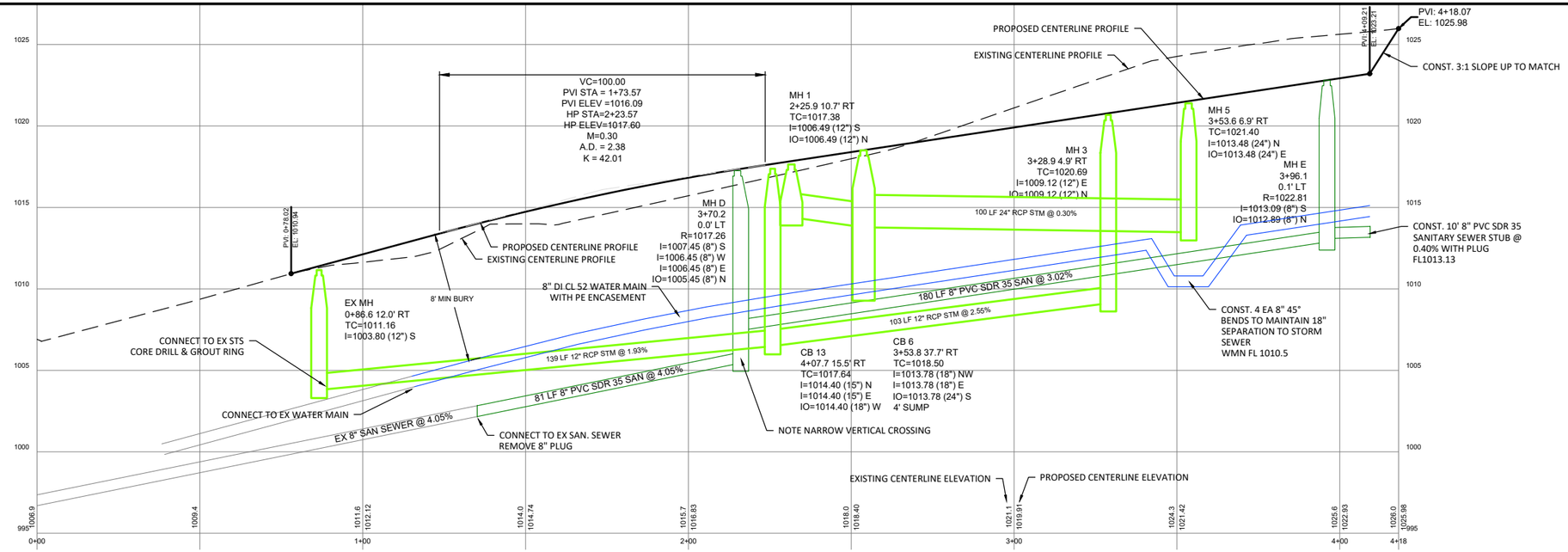

20 0 20 HORIZ. SCALE FEET

4 0 4 VERT. SCALE FEET

BENCHMARK:

TNFH SOUTH END OF EXISTING GREENFIELD DR W
ELEVATION 1024.62

REV.	BY	DATE	REVISION DESCRIPTION
-	-	-	-

JONES HAUGH SMITH
Engineers + Surveyors
415 West North Street Owatonna, MN 507-451-4598

DESIGNED: JHS5
DRAWN: JHS5
CHECKED: SAT
DATE: 5/14/26
FILE NO: 23-259

I hereby certify that this plan, specification, or report was prepared by me or under my direct supervision and that I am a duly Licensed Professional Engineer under the laws of the State of Minnesota.

John H. Schulte V
License No. 44639 Date: 5/14/26

HARVEST HILLS SECOND ADDITION
SCHROM CONSTRUCTION
2026 CONSTRUCTION
FILLMORE STREET PLAN AND PROFILE

SHEET 20 OF 24

GREENFIELD DR EAST

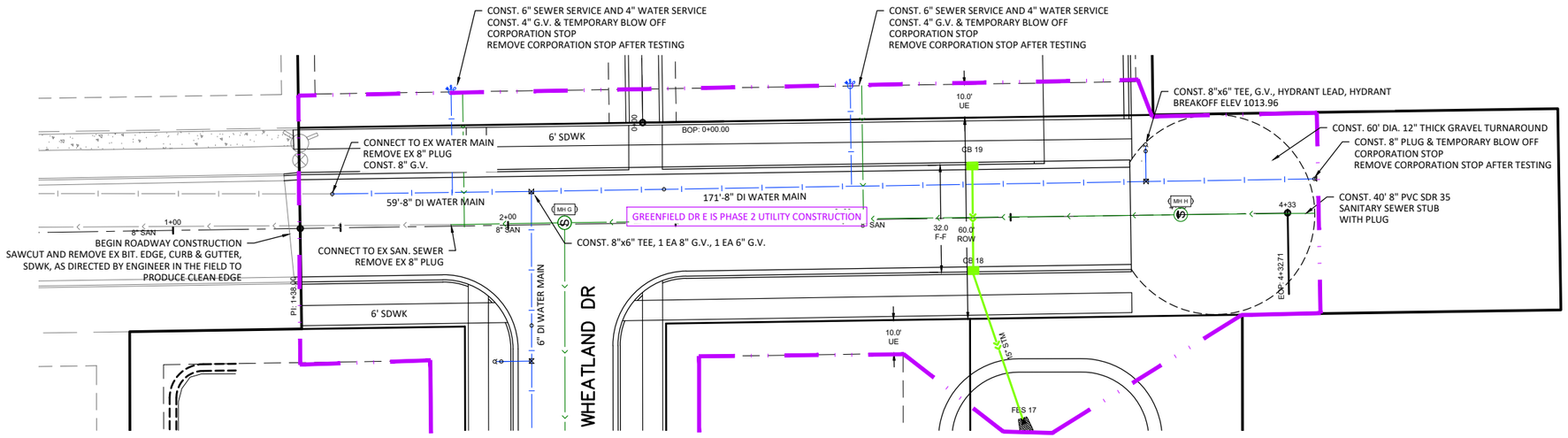

NOTES:
1: ALL INTERSECTION RADII ARE 20' UNLESS NOTED OTHERWISE.
2: ALL CURB RADII ARE DIMENSIONED TO BACK OF CURB. ALL STREET DIMENSIONS ARE TO FACE OF CURB.
3: ALL BITUMINOUS MATCH POINTS TO EXISTING INPLACE BITUMINOUS SHALL BE CLEANLY SAW CUT FULL DEPTH.
4: CONTRACTOR SHALL COORDINATE WITH UTILITY OWNER TO RELOCATE PRIVATE UTILITIES AS NECESSARY TO CONSTRUCT STREETS AND UTILITIES.
5: WATER & SEWER SERVICE LATERALS S SHALL BE INSTALLED PERPENDICULAR TO THE MAIN AND CENTERED ON THE LOT OR AS DIRECTED BY ENGINEER.

PROPOSED CONSTRUCTION

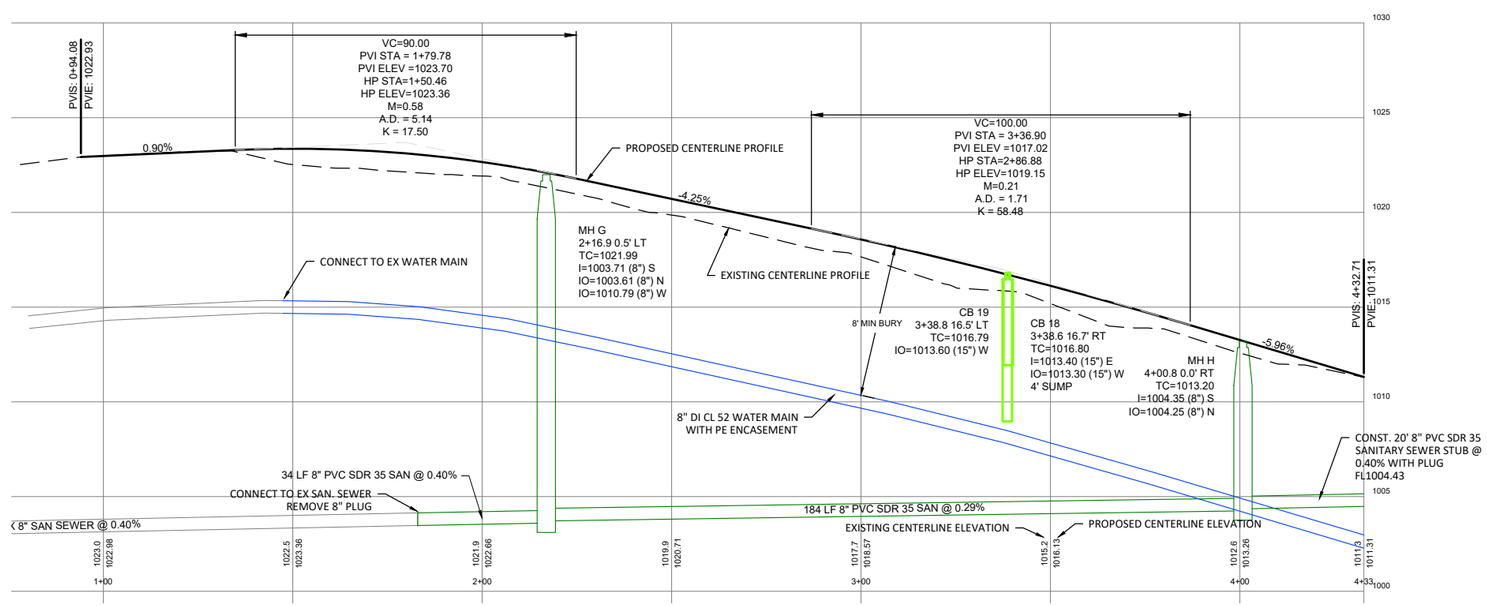

20 0 20 HORIZ. SCALE FEET

4 0 4 VERT. SCALE FEET

BENCHMARK:
TNFH SOUTH END OF EXISTING GREENFIELD DR W
ELEVATION 1024.62

REV.	BY	DATE	REVISION DESCRIPTION
-	-	-	-

JONES HAUGH SMITH
Engineers + Surveyors
415 West North Street Owatonna, MN 507-451-4598

DESIGNED: JHS5
DRAWN: JHS5
CHECKED: SAT
DATE: 5/14/26
FILE NO: 23-259

I hereby certify that this plan, specification, or report was prepared by me or under my direct supervision and that I am a duly Licensed Professional Engineer under the laws of the State of Minnesota.

John H. Schulte V
License No. 44639 Date: 5/14/26

HARVEST HILLS SECOND ADDITION
SCHROM CONSTRUCTION
2026 CONSTRUCTION
GREENFIELD DR E PLAN AND PROFILE

SHEET 21 OF 24

WHEATLAND LN

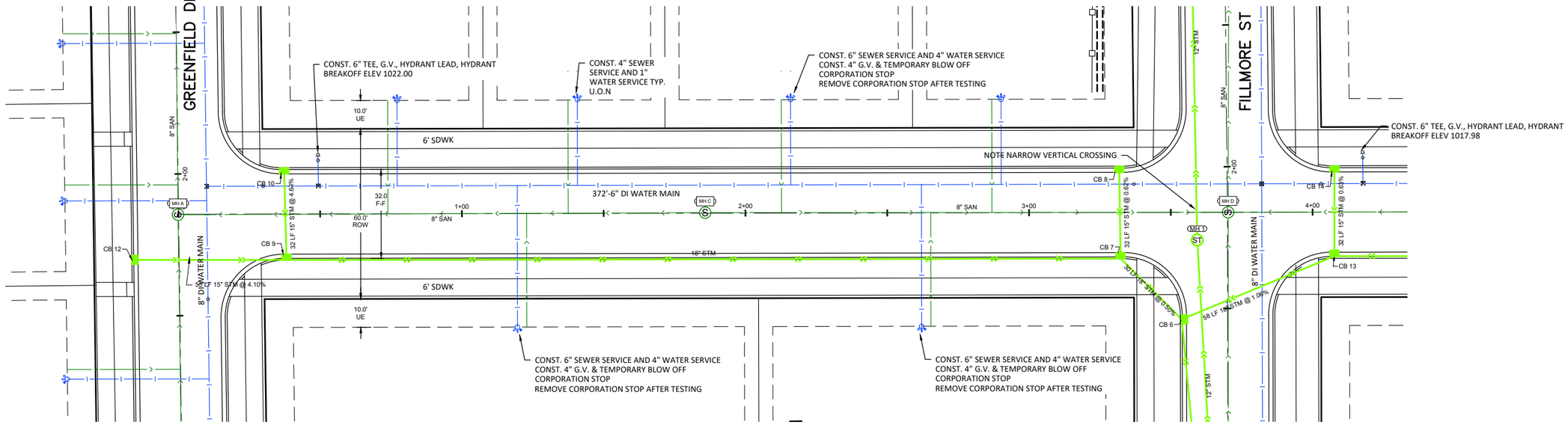

NOTES:
1: ALL INTERSECTION RADII ARE 20' UNLESS NOTED OTHERWISE.
2: ALL CURB RADII ARE DIMENSIONED TO BACK OF CURB. ALL STREET DIMENSIONS ARE TO FACE OF CURB.
3: ALL BITUMINOUS MATCH POINTS TO EXISTING INPLACE BITUMINOUS SHALL BE CLEANLY SAW CUT FULL DEPTH.
4: CONTRACTOR SHALL COORDINATE WITH UTILITY OWNER TO RELOCATE PRIVATE UTILITIES AS NECESSARY TO CONSTRUCT STREETS AND UTILITIES.
5: WATER & SEWER SERVICE LATERALS S SHALL BE INSTALLED PERPENDICULAR TO THE MAIN AND CENTERED ON THE LOT OR AS DIRECTED BY ENGINEER.

PROPOSED CONSTRUCTION

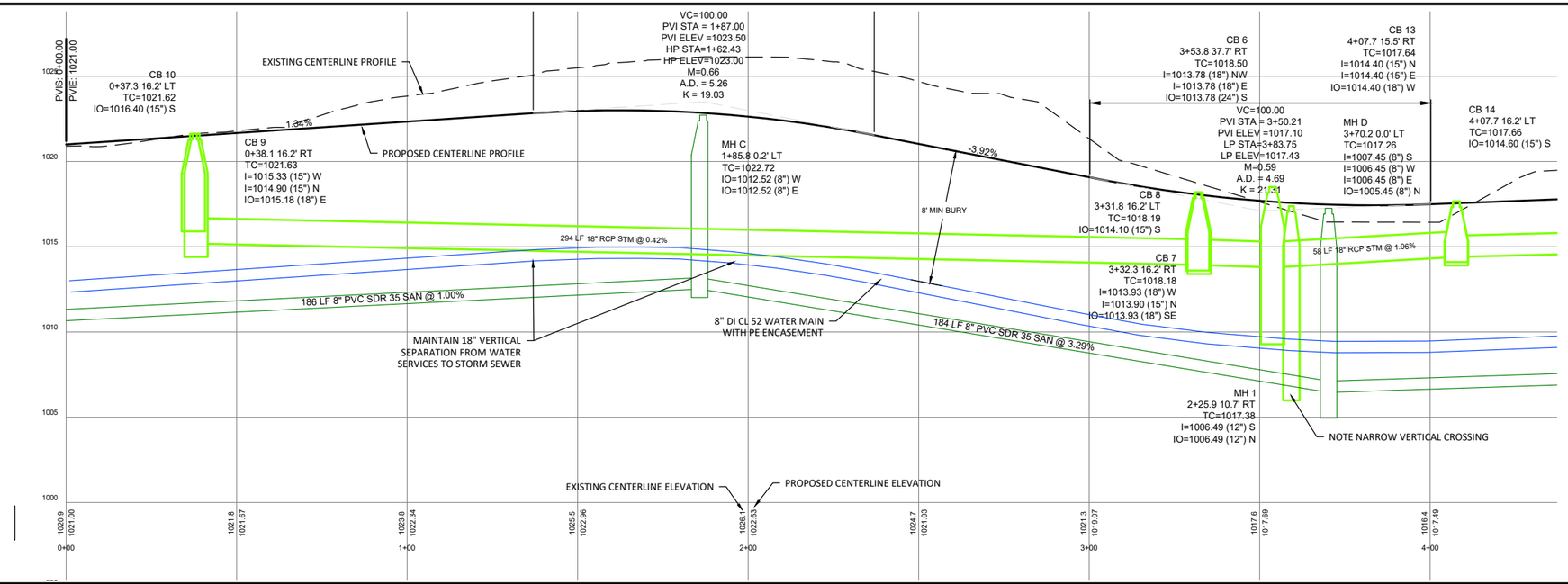

20 0 20 HORIZ. SCALE FEET

4 0 4 VERT. SCALE FEET

BENCHMARK:
TNFH SOUTH END OF EXISTING GREENFIELD DR W
ELEVATION 1024.62

REV.	BY	DATE	REVISION DESCRIPTION
-	-	-	-

JONES HAUGH SMITH
Engineers + Surveyors
415 West North Street Owatonna, MN 507-451-4598

DESIGNED: JHS5
DRAWN: JHS5
CHECKED: SAT
DATE: 5/14/26
FILE NO: 23-259

I hereby certify that this plan, specification, or report was prepared by me or under my direct supervision and that I am a duly Licensed Professional Engineer under the laws of the State of Minnesota.

John H. Schulte V
License No. 44639 Date: 5/14/26

HARVEST HILLS SECOND ADDITION
SCHROM CONSTRUCTION
2026 CONSTRUCTION
WHEATLAND DR PLAN AND PROFILE

SHEET 22 OF 24

WHEATLAND LN

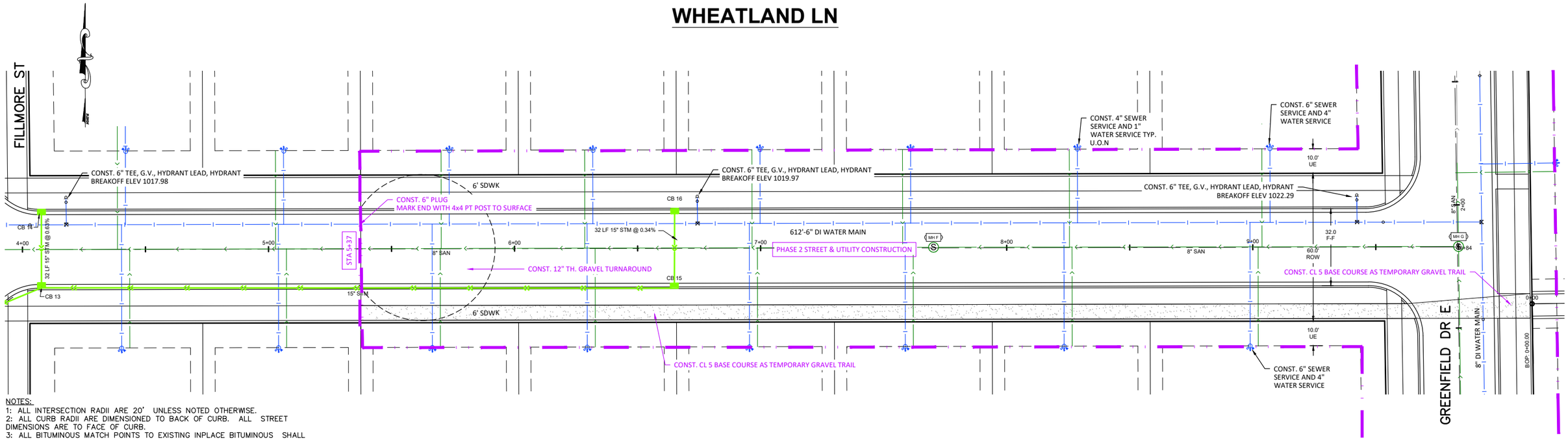

NOTES:
1: ALL INTERSECTION RADII ARE 20' UNLESS NOTED OTHERWISE.
2: ALL CURB RADII ARE DIMENSIONED TO BACK OF CURB. ALL STREET DIMENSIONS ARE TO FACE OF CURB.
3: ALL BITUMINOUS MATCH POINTS TO EXISTING INPLACE BITUMINOUS SHALL BE CLEANLY SAW CUT FULL DEPTH.
4: CONTRACTOR SHALL COORDINATE WITH UTILITY OWNER TO RELOCATE PRIVATE UTILITIES AS NECESSARY TO CONSTRUCT STREETS AND UTILITIES.
5: WATER & SEWER SERVICE LATERALS S SHALL BE INSTALLED PERPENDICULAR TO THE MAIN AND CENTERED ON THE LOT OR AS DIRECTED BY ENGINEER.

PROPOSED CONSTRUCTION

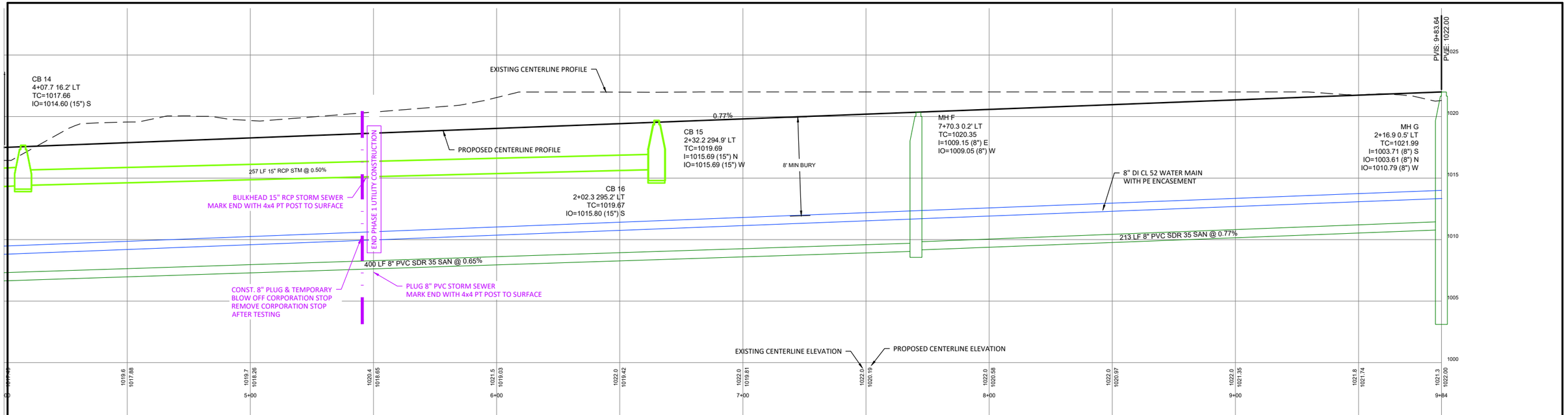

20 0 20 HORIZ. SCALE FEET

4 0 4 VERT. SCALE FEET

BENCHMARK:
TNFH SOUTH END OF EXISTING GREENFIELD DR W
ELEVATION 1024.62

REV.	BY	DATE	REVISION DESCRIPTION
-	-	-	-

JONES HAUGH SMITH
Engineers + Surveyors
415 West North Street Owatonna, MN 507-451-4598

DESIGNED: JHS5
DRAWN: JHS5
CHECKED: SAT
DATE: 5/14/26
FILE NO: 23-259

I hereby certify that this plan, specification, or report was prepared by me or under my direct supervision and that I am a duly Licensed Professional Engineer under the laws of the State of Minnesota.

John H. Schulte V
License No. 44639 Date: 5/14/26

HARVEST HILLS SECOND ADDITION
SCHROM CONSTRUCTION
2026 CONSTRUCTION
WHEATLAND DR PLAN AND PROFILE

SHEET 23 OF 24

PRIVATE ROAD

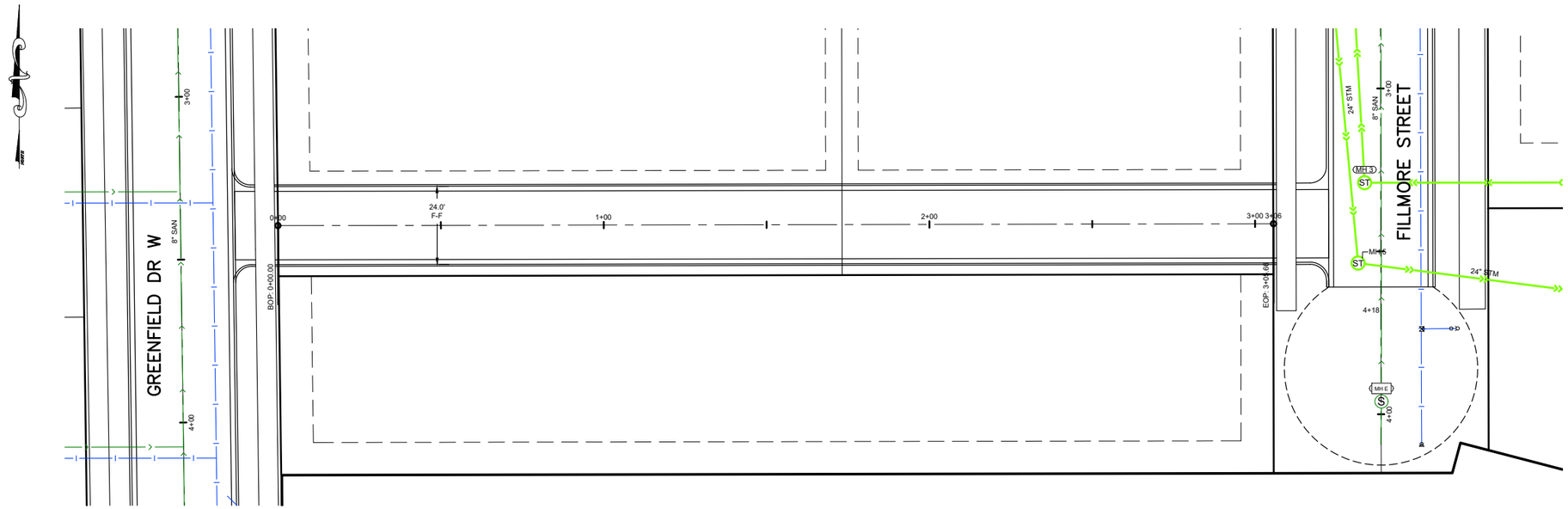

PROPOSED CONSTRUCTION

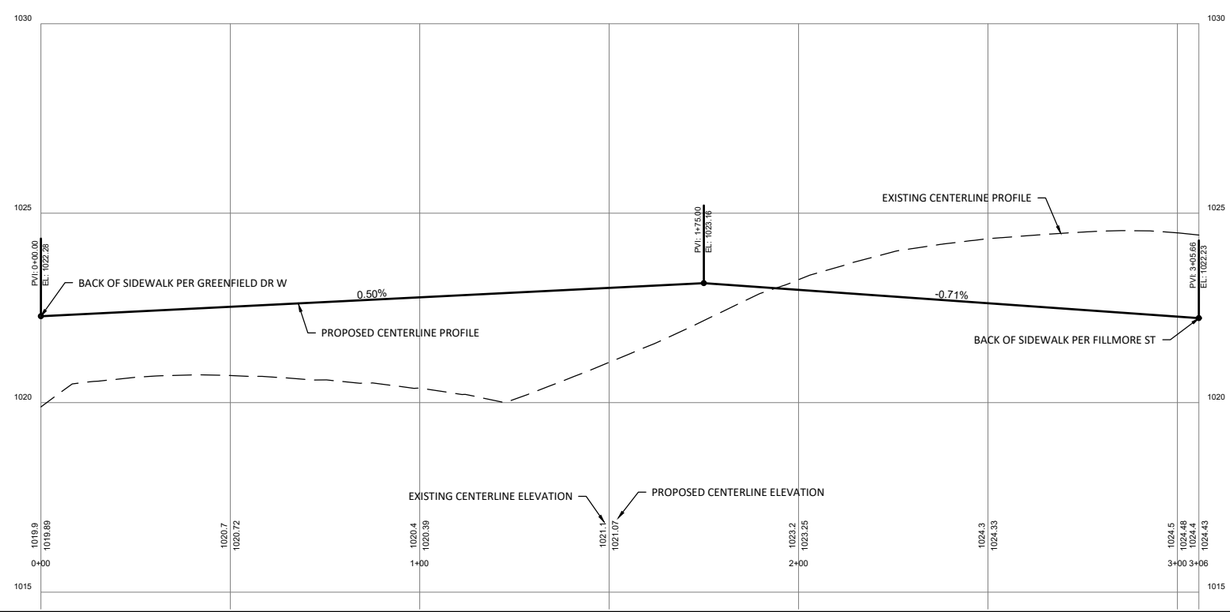

20 0 20 HORIZ. SCALE FEET

4 0 4 VERT. SCALE FEET

BENCHMARK:

TNFH SOUTH END OF EXISTING GREENFIELD DR W
ELEVATION 1024.62

REV.	BY	DATE	REVISION DESCRIPTION
-	-	-	-

JONES HAUGH SMITH
Engineers + Surveyors
415 West North Street Owatonna, MN 507-451-4598

DESIGNED: JHS5
DRAWN: JHS5
CHECKED: SAT
DATE: 5/14/26
FILE NO: 23-259

I hereby certify that this plan, specification, or report was prepared by me or under my direct supervision and that I am a duly Licensed Professional Engineer under the laws of the State of Minnesota.

John H. Schulte V
License No. 44639 Date: 5/14/26

HARVEST HILLS SECOND ADDITION
SCHROM CONSTRUCTION
2026 CONSTRUCTION
PRIVATE ROAD PLAN AND PROFILE

SHEET 24 OF 24